ALLBRO

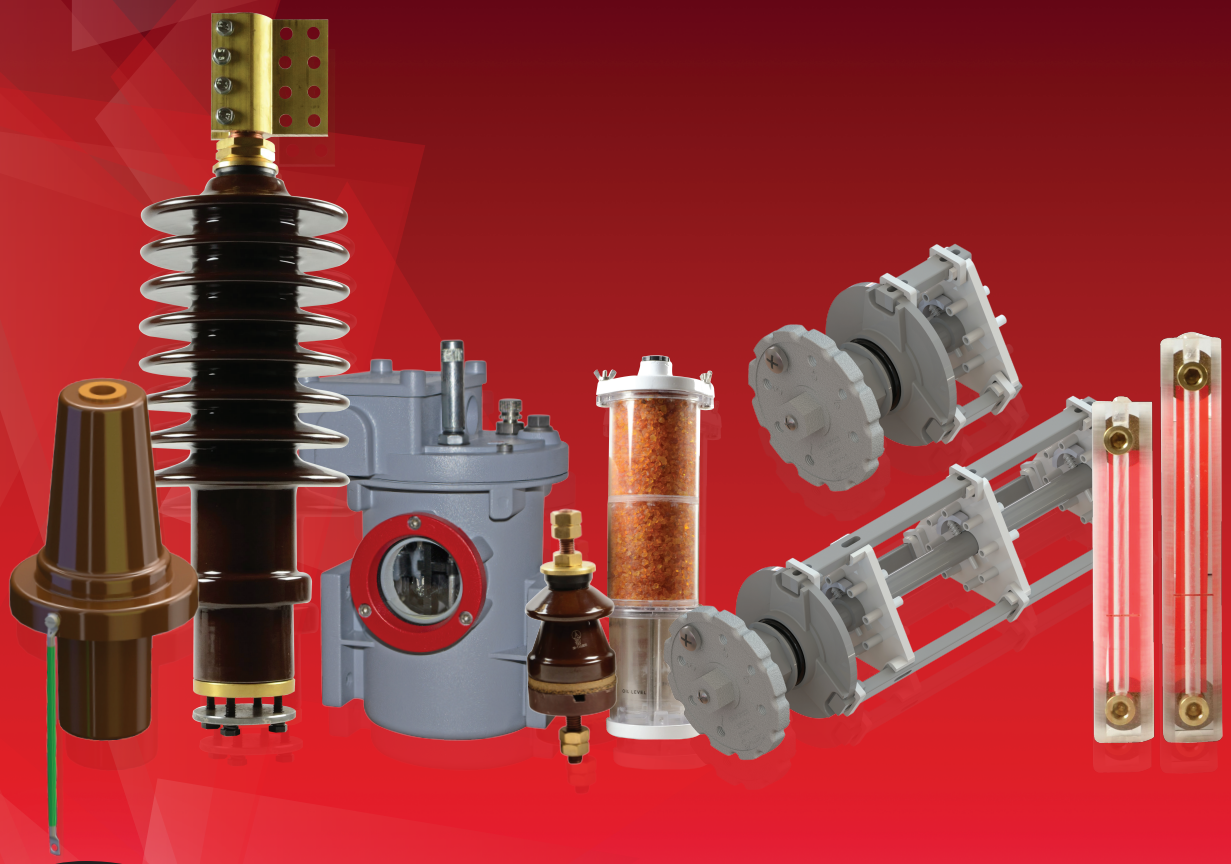

8 TRANSFORMER EQUIPMENT

CATALOGUE EDITION 5

600V
Pg.239

1.1Kv
Pg.240

1.1Kv
Pg.240

3.6Kv
Pg.241

12Kv
Pg.241

24Kv
Pg.242

36Kv
Pg.242

Air-to-air
Pg.244

Cable box
Pg.244

Epoxy LV bushings
Pg.245

Epoxy HV bushings
Pg.246

Flags
Pg.246

DIN
Pg.247

EN
Pg.248

AU
Pg.249

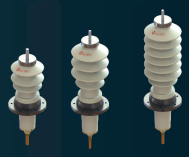
AU HC Bushings
Pg.250

Offset Bushings
Pg.252

Wildlife Guards
Pg.252

Rotary Tap Switches
Pg.254

Rotary Tap Switches
Pg.255

Linear Tap Switches
Pg.258

Rotary Tap Switches
Pg.259

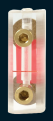
Oil Gauges
Pg.261

Ball Valve
Pg.262

Brass Plug
Pg.262

Radiator Valve
Pg.262

Weld On Boss
Pg.262

Breathers
Pg.263

Thermometers BM80
Pg.265

Thermometers with Contacts
Pg.265

Thermometer F036
Pg.266

Pocket Housing and Boss Assembly
Pg.266

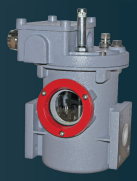
Buchholz Relays
Pg.268

Pressure Relief Valve
Pg.274

Magnetic Oil Gauges
Pg.278

AVS Cone Rubbers
Pg.243

PLEASE NOTE: IT IS RECOMMENDED FOR ESTER OIL OR WHERE TRANSFORMERS ARE BEING USED FOR RENEWABLE ENERGY, THAT BUSHINGS BE SUPPLIED WITH AVS CONE RUBBERS & NEBAR CORK GASKETS.

KINDLY SPECIFY THE APPLICATION WHEN ORDERING.

600V Terminal Immersed Bushings

Part Number	Description	U.m (kV)	Ir (A)	Material	Tank Hole Size (mm)	Stem Thread Size	Stem Pitch (mm)	Recommended Torque (N.m)
040-006	B6	0.6	45	PA6 Black Nylon	15	M6	1	2
040-035	BS6	0.6	45	PA6 Black Nylon	12	M6	1	2
040-007	B8	0.6	60	PA6 Black Nylon	21	M8	1,25	3,5
040-008	B10	0.6	80	DMC	22	M10	1,5	8
040-009	B12	0.6	120	DMC	25	M12	1,75	16
040-025	NB6	0.6	45	DMC	19	M6	1	2
040-026	NB8	0.6	60	DMC	19	M8	1,25	3,5
040-034	NB8 - 3.3	3.3	60	DMC	19	M8	1,25	3,5
040-027	NB10	0.6	80	DMC	22	M10	1,5	8

*** Note:**
Detailed drawings available on request.
Tank wall thickness minimum 3mm , maximum 6mm
Tank hole size tolerance is -0mm +1mm
AVS Cone rubbers see page 243
AVS- Allbro Veri Seal

1.1Kv Outdoor Immersed Bushings

Part Number	Description	U.m (kV)	Ir (A)	Tank Hole Size (mm)	Stem Thread Size	Stem Pitch (mm)	Recommended Stem Torque (N.m)	Recommended Flag Torque (N.m)	Recommened Base Plate Torque (N.m)
040-312	SX160	1.1	160	31	M10	1,5	8	-	-
040-323	SAD250	1.1	250	31	M12	1,75	16	-	-
040-324	SAD330	1.1	330	31	M14	2	16	-	-
040-315	SB500	1.1	500	45	M18	2	18	-	-
040-316	SB630	1.1	630	45	M20	2	22	-	-
040-326	SBD630	1.1	630	40	M20	2	22	-	-
040-317	SC850 + Brass Flag	1.1	850	50	M24	2	26	30	-
040-318	SC1250 + Brass Flag	1.1	1250	50	M30	2	32	30	-
040-361	SD1600 + Brass Flag	1.1	1600	70	M36	2	40	30	30
040-320	SD2500 + Brass Flag	1.1	2500	70	M42	2	50	20-50	30
040-319	SD2900 + Brass Flag	1.1	2900	70	M42	2	50	20-25	30
040-356/A	SD3500 + Brass Flag	1.1	3500	70	M42	2	50	20-25	30

*** Note:**
Detailed drawings available on request.
Tank wall thickness minimum 3mm , maximum 6mm
Tank hole size tolerance is -0mm +1mm
AVS Cone rubbers see page 243
AVS- Allbro Veri Seal

PLEASE NOTE: IT IS RECOMMENDED FOR ESTER OIL OR WHERE TRANSFORMERS ARE BEING USED FOR RENEWABLE ENERGY, THAT BUSHINGS BE SUPPLIED WITH AVS CONE RUBBERS & NEBAR CORK GASKETS.

KINDLY SPECIFY THE APPLICATION WHEN ORDERING.

3.6Kv Outdoor Immersed Bushings

Part Number	Description	U.m (kV)	Ir (A)	Tank Hole Size (mm)	Stem Thread Size	Stem Pitch (mm)	Recommened Stem Torque (N.m)	Recommended Flag Torque (N.m)
040-207	SE250	3.6	250	40	M12	1,75	16	-
040-348	SE330	3.6	330	40	M14	2	16	-
040-351	LE630	3.6	630	41	M20	2	22	-
040-366	SE1250	3.6	1250	70	M30	2	32	20 - 25
040-231	SE2500	3.6	2500	70	M42	2	50	20 - 25
040-365	SE2900	3.6	2900	70	M42	2	50	20 - 25

12Kv Outdoor Immersed Bushings

DL = Draw Lead
DL+T = Draw Lead + Tail

Part Number	Description	U.m (kV)	Ir (A)	Tank Hole Size (mm)	CD (mm)	Stem Thread Size	Stem Pitch (mm)	Recommended Stem Torque (N.m)	Recommended Flag Torque (N.m)
040-337	LF120	12	120	50	-	M12	1,75	16	12
040-359	SFL250	12	250	55	31	M12	1,75	16	-
040-352/R	SFLF250 DL	12	30	50	31	M12	1,75	16	12
040-352/E	SFLF250 DL+T	12	30	50	31	M12	1,75	16	12
040-354	SFLF250 Solid	12	250	50	31	M12	1,75	16	12
040-358	LF630	12	630	60	25	M20	2	22	-
040-357	LF1250	12	1250	75	25	M30	2	32	12
040-232	LF2500 Long	12	2500	117	31	M42	2	50	12
040-458	LF2900 Long	12	2900	117	31	M42	2	50	12

*** Note:**
Detailed drawings available on request.
Tank wall thickness minimum 3mm , maximum 6mm
Tank hole size tolerance is -0mm +1mm
AVS Cone rubbers see page 243
AVS- Allbro Veri Seal

PLEASE NOTE: IT IS RECOMMENDED FOR ESTER OIL OR WHERE TRANSFORMERS ARE BEING USED FOR RENEWABLE ENERGY, THAT BUSHINGS BE SUPPLIED WITH AVS CONE RUBBERS & NEBAR CORK GASKETS.

KINDLY SPECIFY THE APPLICATION WHEN ORDERING.

24Kv Outdoor Immersed Bushings

DL = Draw Lead
DL+T = Draw Lead + Tail

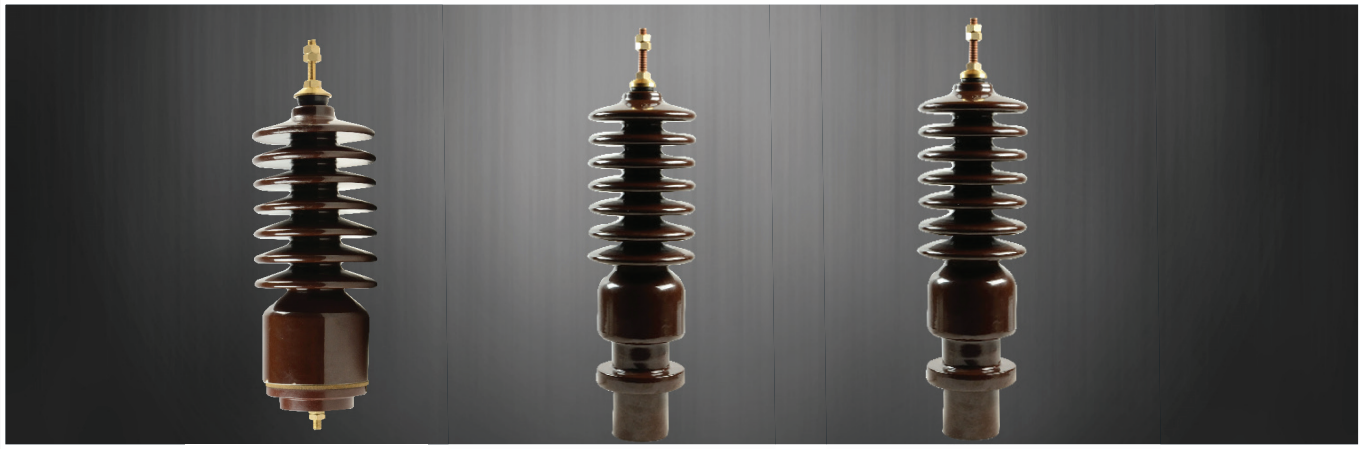

Part Number	Description	U.m (kV)	Ir (A)	Tank Hole Size (mm)	CD (mm)	Stem Thread Size	Stem Pitch (mm)	Recommended Stem Torque (N.m)	Recommended Clamp Torque (N.m)
040-331	SG250	24	250	90	31	M12	1,75	16	12
040-353	SGF250 DL	24	30	80	31	M12	1,75	16	12
040-353/R	SGF250 DL+T	24	30	80	31	M12	1,75	16	12
040-355	SGF250 Solid	24	250	80	31	M12	1,75	16	12

36Kv Outdoor Immersed Bushings

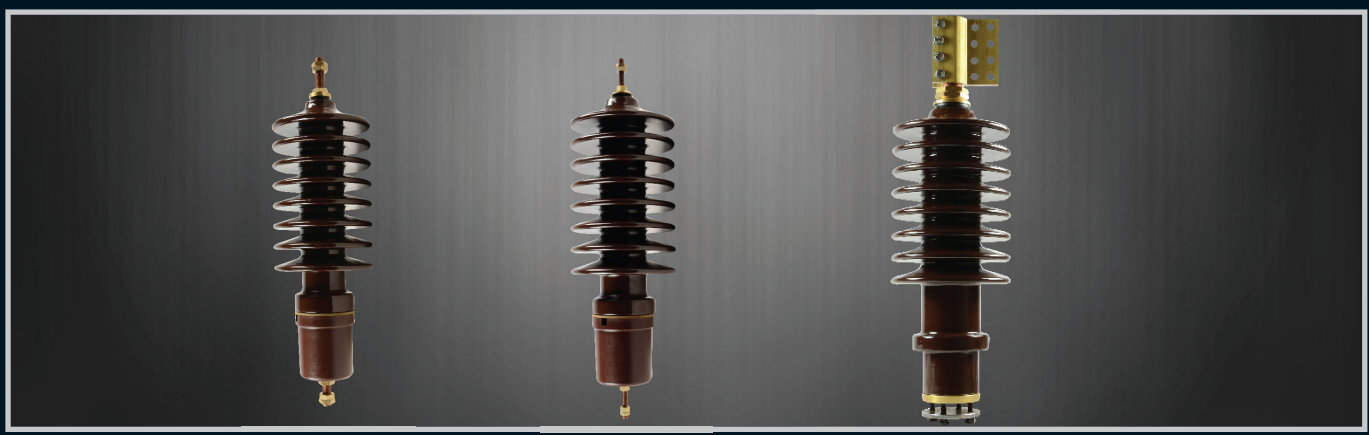

Part Number	Description	U.m (kV)	Ir (A)	Tank Hole Size (mm)	CD (mm)	Stem Thread Size	Stem Pitch (mm)	Recommended Stem Torque (N.m)	Recommended Clamp Torque (N.m)
040-222	LH250 DL + T	36	30	90	31	M12	1,75	16	16
040-221	LHC250	36	250	90	31	M12	1,75	16	-
040-341	LH630	36	630	90	31	M20	2	22	16
040-342	LHC630	36	630	90	31	M20	2	22	-
040-544	LH1250 Long DL	36	630	117	31	M30	2	32	16
040-541	LH1250 Long	36	1250	117	31	M30	2	32	12
040-545	LH1250 Long SR	36	1250	117	31	M30	2	32	12
040-546	LH2500 Long DL	36	630	117	31	M42	2	50	12
040-540	LH2500 Long	36	2500	117	31	M42	2	50	12
040-547	LH2500 Long SR	36	2500	117	31	M42	2	50	12
040-362	LJ250	48	250	90	31	M12	1,75	16	16

*** Note:**
Detailed drawings available on request.
Tank wall thickness minimum 3mm , maximum 6mm
Tank hole size tolerance is -0mm +1mm
AVS Cone rubbers see page 243
AVS- Allbro Veri Seal

PLEASE NOTE: IT IS RECOMMENDED FOR ESTER OIL OR WHERE TRANSFORMERS ARE BEING USED FOR RENEWABLE ENERGY, THAT BUSHINGS BE SUPPLIED WITH AVS CONE RUBBERS & NEBAR CORK GASKETS.

KINDLY SPECIFY THE APPLICATION WHEN ORDERING.

AVS® Cone Rubber

ALLBRO VARI SEAL (AVS®) is the next generation cone rubber compound. Distinguishable by their brown colour and specially manufactured with additives for harsh environments.

Benefits of using AVS® :

- Approved by Eskom
- Durable
- Excellent UV performance
- High grade sealing for use with Ester or Mineral Oil Transformers
- Proven endurance in long term tests

Please contact our Sales Department for a quotation. AVS® can be supplied loose or fitted to the bushing that you require.

Part Number	Description	iD (mm)	Top oD	Height (mm)
007-213V	M10-H Cone AVS®	10	30	19
007-214V	M12-H Cone AVS®	12	30	19
007-215V	M14-H Cone AVS®	14	30	19
007-216V	M18-H Cone AVS®	18	36	15
007-217V	M20-H Cone AVS®	20	36	15
007-218V	M24-H Cone AVS®	24	49	22
007-219V	M30-H Cone AVS®	30	49	22
007-221V	M12-ALB2 Cone AVS®	12	37	27
007-222V	M12-ALB1 Cone AVS®	12	35	19
007-223V	M36-H Cone AVS®	36	68	24
007-224V	M42-H Cone AVS®	42	68	24
007-225V	M6-NB Cone AVS®	6	24	18
007-226V	M8-NB Cone AVS®	8	24	18

Air- to-air Type

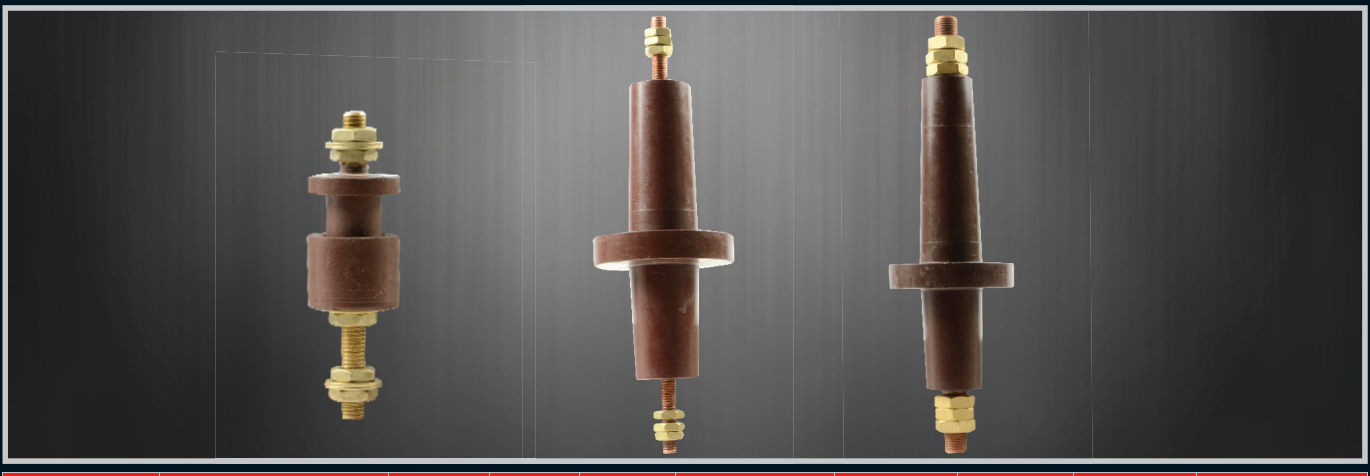

Part Number	Description	U.m (kV)	Ir (A)	Tank Hole Size (mm)	ACSD - 60 Sec (kV)	Stem Diameter	Stem Thread Size	Stem Pitch (mm)	Recommended Stem Torque (N.m)
070-392	FB10 Flame Proof	1.1	80	21	7.5	M10	M10	1,5	8
040-015	AA-062/250	7.2	250	50	18	M12	M12	1,75	16
040-019	AA-062-630	7.2	630	50	18	M20	M20	2	22
040-016	AA-112/250	12	250	50	30	M12	M12	1,75	16
040-017	AA-112/630	12	630	50	30	M20	M20	2	22
040-014	AA-113/250	12	250	50	30	M12	M12	1,75	16
040-020	AA-113/630	12	630	50	30	M20	M20	2	22

*** Note:**
Detailed drawings available on request
Tank wall thickness minimum 3mm , maximum 6mm
Tank hole size tolerance is -0mm +1mm

Cable Box Type

Part Number	Description	U.m (kV)	Ir (A)	Tank Hole Size (mm)	LI	Stem Diameter	Stem Thread Size	Stem Pitch (mm)	Recommended Stem Torque (N.m)	ACSD (kV)
040-208	SM250	12 *	250	50	N/A	M12	M12	1,75	16	30
040-005	IM250	12	250	50	N/A	M12	M12	1,75	16	30
040-032	CF1	22	630	72	N/A	OD=20 , Tapped M12	M16	2	16	50

*** 7.2Kv Outdoor Rating**

*** Note:**
Detailed drawings available on request
Tank wall thickness minimum 3mm , maximum 6mm
Tank hole size tolerance is -0mm +1mm

Epoxy Bushings - LV Range

Single Phase (1 way)

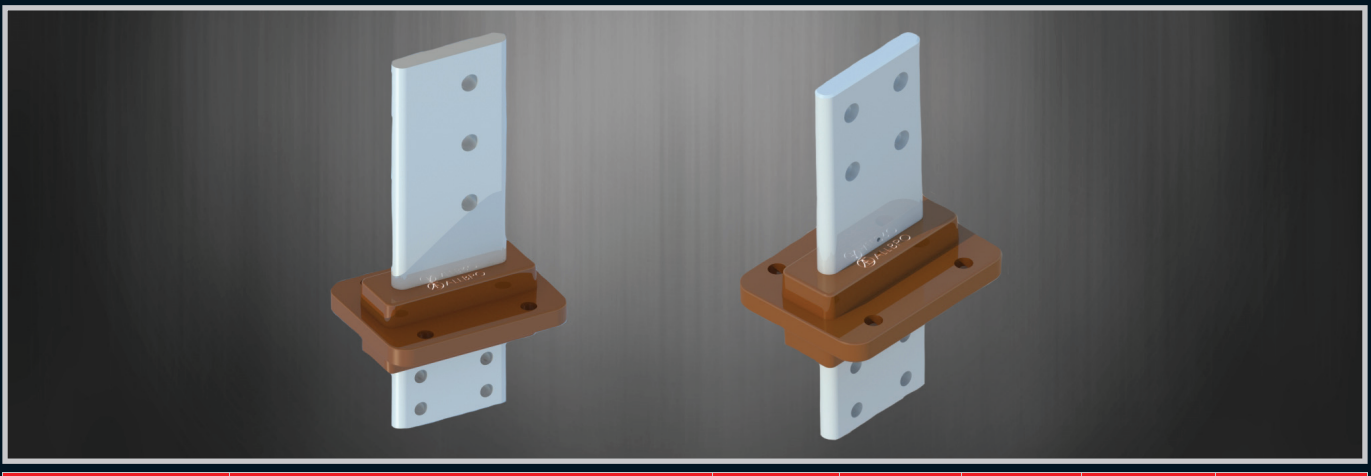

Part Number	Description	U.m (kV)	Ir (A)	ACSD (kV)	LI (kV)	PD
021-501	Monoblock 1kV 4000A 1W 120x392	1.1	4000	10	30	>10pC
021-503	Monoblock 1kV 4000A 1W 120x355	1.1	4000	10	30	>10pC

Quad Phase (1 way)

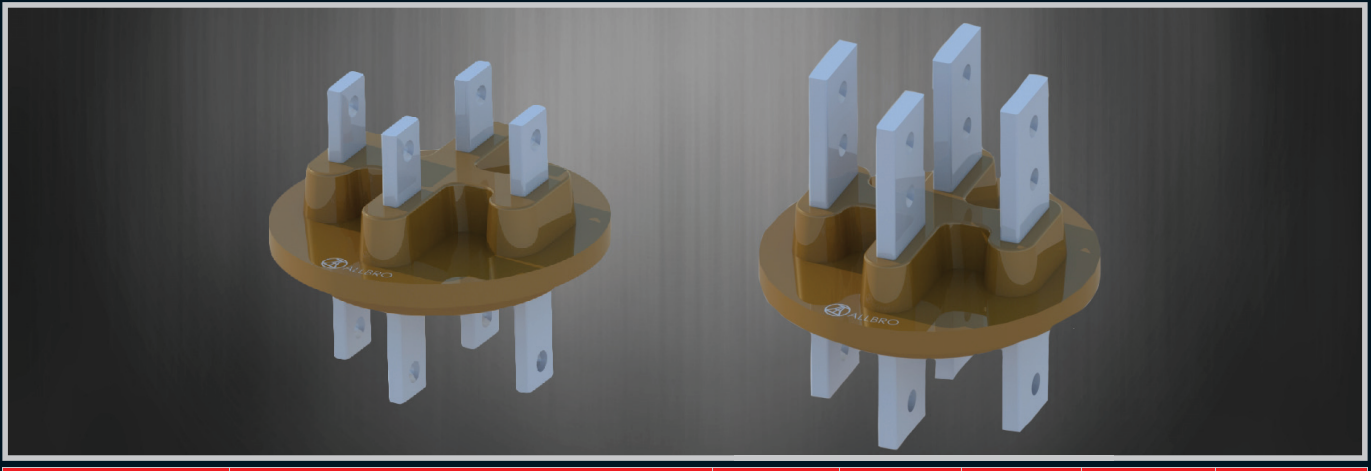

Part Number	Description	U.m (kV)	Ir (A)	ACSD (kV)	LI (kV)	PD
021-505	Monoblock 1kV 500A 4W 200D	1.1	500	10	30	>10pC
021-506	Monoblock 1kV 1000A 4W 200D	1.1	1000	10	30	>10pC

Epoxy Bushings - HV Range

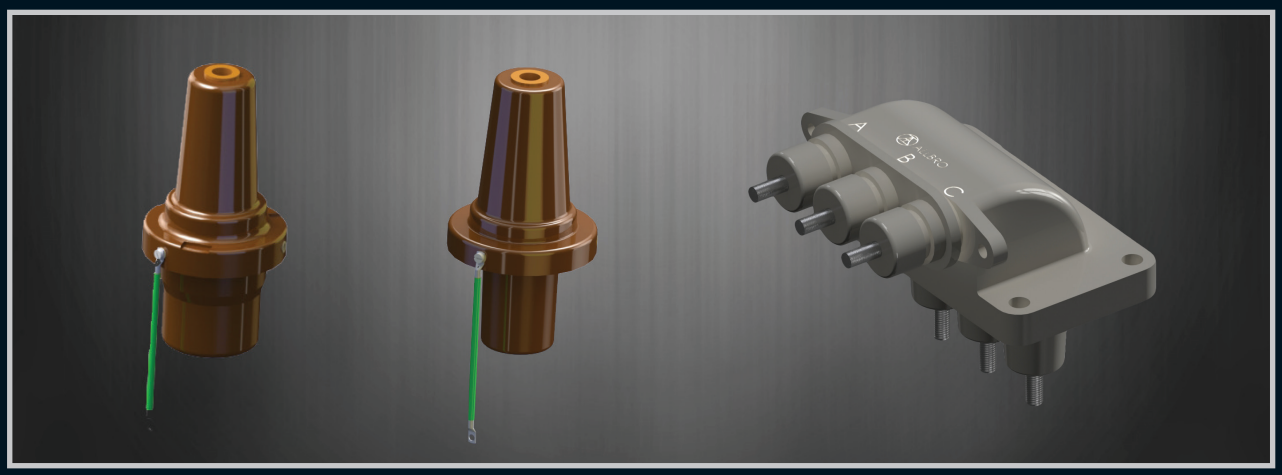

Part Number	Description	U.m (kV)	Ir (A)	ACSD (kV)	LI (kV)	PD
021-502	C-Type 630A 76H74D Resin Bushing	24	630	50	150	>10pC
021-508	C-Type 630A 50H67D Resin Bushing	24	630	50	150	>10pC
021-504	Monoblock 12kV 200A 3W-RA	12kV	200A	25kV	95kV	>10pC

Flags

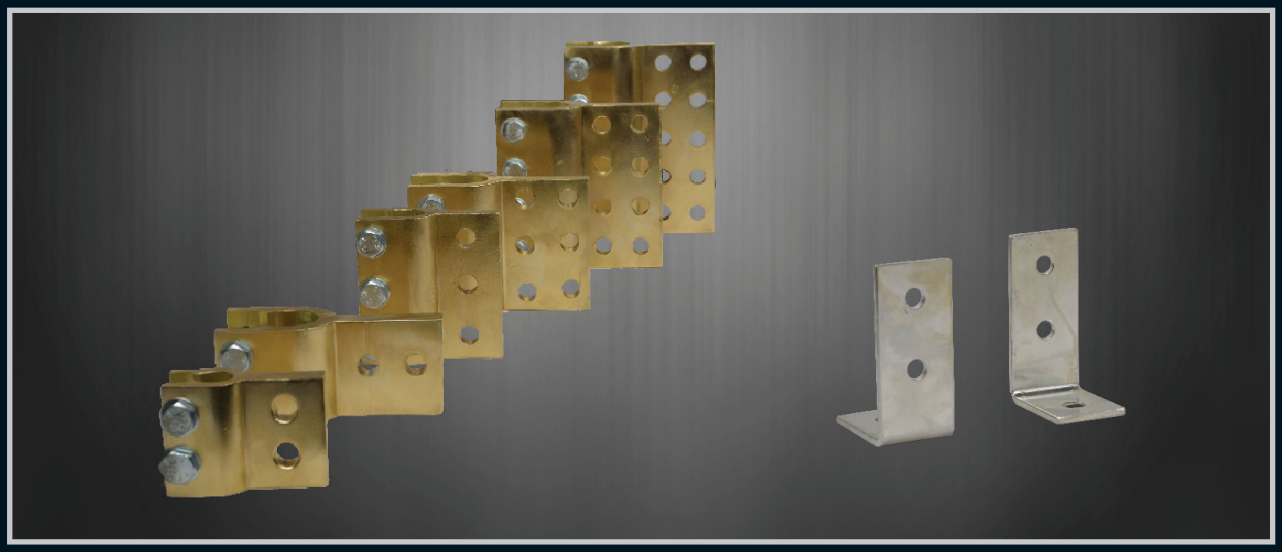

Part Number	Description	Type	Flag Height (mm)	Hole Size (mmØ)
010-077	SAD250 Flag	Copper L Shape	110	13
010-078	SAD330 Flag	Copper L Shape	110	13
010-079	SB 500 Flag	Copper L Shape	110	19
010-080	SB 630 Flag	Copper L Shape	110	21
010-003	SC850 /1250 Flag	Brass “Y” Extrusion	60	21
010-088	SC1250 Flag	Brass “Y” Extrusion	60	38
010-098	SD1600 Flag	Brass “Y” Extrusion	100	27
010-004	SD2500 Flag	Brass “Y” Extrusion	100	38
010-151	SD2900 Flag	Brass “Y” Extrusion	135	38
010-076	SD3500 Flag	Brass “Y” Extrusion	172	38

DIN Bushing Range

Note:
Bushings are manufactured to DIN 42530, 42539, 42531, 42532, 42533, 42534
Tank wall thickness minimum 3mm , maximum 6mm
Tank hole size tolerance is -0mm +1mm

Part Number	Description	U.m (kV)	Ir (A)	Tank Hole Size (mm)	LI (kV)	ACSD Dry (kV)	PF Wet	CD (mm)	Stem Connect
DT 1/250	DIN 42530 1/250	1	250	-	-	-	-	60	M12
DT 1/630	DIN 42530 1/630	1	630	45	-	-	-	75	M20
DT 1/1000	DIN 42530 1/1000	1	1000	56	-	-	-	75	M30
DT 1/2000	DIN 42530 1/2000	1	2000	70	-	-	-	75	M42
DT 1/3150	DIN 42530 1/3150	1	3150	90	-	-	-	75	M48
DT 3/250	DIN 42539 3/250	3	250	39	40	14	10	120	M12
DT 3/630	DIN 42539 3/630	3	630	45	40	14	10	120	M20
DT 3/1000	DIN 42539 3/1000	3	1000	56	40	14	10	125	M30
DT 3/2000	DIN 42539 3/2000	3	2000	70	40	14	10	125	M42
DT 3/3150	DIN 42539 3/3150	3	3150	90	40	14	10	125	M48
DT 3/4500	DIN 42539 3/4500	3	4500	119	40	14	10	130	M55
DT 3/6500	DIN 42539 3/6500	3	6500	119	40	14	10	130	M75
10NF250	DIN 42531 10NF250	12	250	78	75	28	-	305	M12
10NF630	DIN 42532 10NF630	12	630	90	75	28	-	305	M20
10NF1000	DIN 42533 10NF1000	12	1000	110	75	28	-	295	M30
10NF2000	DIN 42533 10NF2000	12	2000	135	75	28	-	295	M42
10NF3150	DIN 42533 10NF3150	12	3150	135	75	28	-	295	M48
20NF250	DIN 42531 20NF250	24	250	78	125	50	-	450	M12
20NF630	DIN 42532 20NF630	24	630	90	125	50	-	440	M20
20NF1000	DIN 42533 20NF1000	24	1000	110	125	50	-	445	M30
20NF2000	DIN 42533 20NF2000	24	2000	135	125	50	-	445	M42
20NF3150	DIN 42533 20NF3150	24	3150	135	125	50	-	445	M48
30NF250	DIN 42531 30NF250	36	250	78	170	70	-	607	M12
30NF630	DIN 42532 30NF630	36	630	90	170	70	-	662	M20
30NF1000	DIN 42533 30NF1000	36	1000	110	170	70	-	635	M30
30NF2000	DIN 42533 30NF2000	36	2000	135	170	70	-	635	M42
30NF3150	DIN 42533 30NF3150	36	3150	135	170	70	-	635	M48
52/1000	DIN 42534 52KV 1000	52	1000	135	250	95	-	950	M30
52/2000	DIN 42534 52KV 2000	52	2000	135	250	95	-	950	M42
52/3150	DIN 42534 52KV 3150	52	3150	135	250	95	-	950	M48

EN Bushing Range

Note:
Bushings are manufactured to EN50180 and EN50386
Tank wall thickness minimum 3mm , maximum 6mm
Tank hole size tolerance is -0mm +1mm

Part Number	Description	U.m (kV)	Ir (A)	Tank Hole Size (mm)	LI (kV)	ACSD Dry (kV)	ACSD Wet (kV)	CD (mm)	Stem Connect
EN 1/250	EN 50386 1/250	1.1	250	28	20	10	10	55	M12 / M12
EN 1/250 P	EN 50386 1/250 P	1.1	250	28	20	10	10	55	M12 / 23x23x5
EN 1/630	EN 50386 1/630	1.1	630	45	20	10	10	55	M20 / M20
EN 1/630 P	EN 50386 1/630 P	1.1	630	45	20	10	10	55	M20 / 32x32x9
EN 1/1250	EN 50386 1/1250	1.1	1250	56	20	10	10	75	M30 / 70 ø x 10
EN 1/1000 P	EN 50386 1/1000 P	1.1	1000	56	20	10	10	75	M30 / 57x57x12
EN 1/1250 P	EN 50386 1/1250 P	1.1	1250	56	20	10	10	75	M30 / 57x57x12
EN 1/2000	EN 50386 1/2000	1.1	2000	70	20	10	10	75	M42 / 100x100x15
EN 1/2000 P	EN 50386 1/2000 P	1.1	2000	70	20	10	10	75	M42 / 80x30x15
EN 1/3150	EN 50386 1/3150	1.1	3150	90	20	10	10	75	M48 / 110x110x15
EN 1/3150 P	EN 50386 1/3150 P	1.1	3150	90	20	10	10	75	M48 / 120x30x15
EN 1/4000	EN 50386 1/4000	1.1	4000	118	20	10	10	85	M55 / 160x160x24
EN 12/250 P2	EN 50180 12/250 P2	12	250	80	75	-	28	240	M12/M12
EN 12/250 P4	EN 50180 12/250 P4	12	250	80	75	-	28	372	M12/M12
EN 12/630 P2	EN 50180 12/630 P2	12	630	90	75	-	28	240	M20/M20
EN 12/630 P4	EN 50180 12/630 P4	12	630	90	75	-	28	372	M20/M20
EN 12/1250 P4	EN 50180 12/1250 P4	12	1250	110	75	-	28	372	M30/M30
EN 12/2000 P4	EN 50180 12/2000 P4	12	2000	135	75	-	28	372	M42/M42
EN 12/3150 P4	EN 50180 12/3150 P4	12	3150	135	75	-	28	372	M48/M48
EN 24/250 P2	EN 50180 24/250 P2	24	250	80	125	-	50	480	M12/M12
EN 24/250 P4	EN 50180 24/250 P4	24	250	80	125	-	50	744	M12/M12
EN 24/630 P2	EN 50180 24/630 P2	24	630	90	125	-	50	480	M20/M20
EN 24/630 P4	EN 50180 24/630 P4	24	630	90	125	-	50	744	M20/M20
EN 24/1250 P4	EN 50180 24/1250 P4	24	1250	110	125	-	50	744	M30/M30
EN 24/2000 P4	EN 50180 24/2000 P4	24	2000	135	125	-	50	744	M42/M42
EN 24/3150 P4	EN 50180 24/3150 P4	24	3150	135	125	-	50	744	M48/M48
EN 36/250 P2	EN 50180 36/250 P2	36	250	80	150	-	70	720	M12/M12
EN 36/250 P4	EN 50180 36/250 P4	36	250	80	150	-	70	1116	M12/M12
EN 36/630 P2	EN 50180 36/630 P2	36	630	90	150	-	70	720	M20/M20
EN 36/630 P4	EN 50180 36/630 P4	36	630	90	150	-	70	1116	M20/M20
EN 36/1250 P4	EN 50180 36/1250 P4	36	1250	110	150	-	70	1116	M30/M30
EN 36/2000 P4	EN 50180 36/2000 P4	36	2000	135	150	-	70	1116	M42/M42
EN 36/3150 P4	EN 50180 36/3150 P4	36	3150	135	150	-	70	1116	M48/M48

AU LV Bushing Range

Part Number	Description	U.m (kV)	Ir (A)	Tank Hole Size (mm)	LI (kV)	ACSD (kV)	CD (mm)	Stem Thread Size	Stem Pitch (mm)	Recommended Stem Torque (N.m)
040-369/X	AU 0K6-120 1H14CU Bushing	600V	120	29	10	4	>70	M10	1,5	15
040-369/XT1	AU 0K6-120 2H14CU Bushing	600V	120	29	10	4	>70	M10	1,5	15
040-369/XA1	AU 0K6-120 1H11BR Bushing	600V	80	29	10	4	>70	M10	1,5	15
040-369/XA2	AU 0K6-120 1H11CU Bushing	600V	120	29	10	4	>70	M10	1,5	15
040-370/X	AU 3K6-200 1H14 Bushing	3.6	200	48	40	16	>105	M12	1,75	35
040-370/XA1	AU 3K6-200 1H11 Bushing (A)	3.6	200	48	40	16	>105	M12	1,75	35
040-371/X	AU 3K6-500 1H14 Bushing	3.6	500	48	40	16	>105	M16	2	40
040-371/XA1	AU 3K6-500 2H14 Bushing (A)	3.6	500	48	40	16	>105	M16	2	40
040-387/XE	AU 3K6-800 1H14 Bushing (E)	3.6	800	80	40	16	>115	M20	2	100
040-375/X	AU 3K6-300 Bushing	3.6	300	48	40	16	>105	M16	2	40
040-376/XW	AU 3K6-1000 S1H14 Bushing (W)	3.6	1000	72	40	16	>105	M24	2	120
040-376/X	AU 3K6-1050 1H22 Bushing	3.6	1050	80	40	16	>115	M24	2	120
040-376/XE	AU 3K6-1050 1H14 Bushing	3.6	1050	80	40	16	>115	M24	2	120
040-376/XE2	AU 3K6-1050 2H14 Bushing (E)	3.6	1050	80	40	16	>115	M24	2	120
040-376/XA2	AU 3K6-1050 1H18 Bushing (A)	3.6	1050	80	40	16	>115	M24	2	120
040-379/XW	AU 3K6-1400 1H14 Bushing (W)	3.6	1400	80	40	16	>115	M33	2	130
040-380/XW	AU 3K6-1400 2H14 Bushing (W)	3.6	1400	80	40	16	>115	M33	2	130
040-381/XW	AU 3K6-1400 2H14 Bushing (W-SP)	3.6	1400	80	40	16	>115	M33	2	130
040-381/XE	AU 3K6-1400 2H14 Bushing (E)	3.6	1400	80	40	16	>115	M33	2	130
040-382/XW	AU 3K6-1400 1H18 Bushing (W)	3.6	1400	80	40	16	>115	M33	2	130
040-383/XW	AU 3K6-1400 2H18 Bushing (W)	3.6	1400	80	40	16	>115	M33	2	130
040-377/X	AU 3K6-2000 4H14 Bushing	3.6	2000	80	40	16	>115	M36	2	140
040-377/XE	AU 3K6-2000 4H14 Bushing (E)	3.6	2000	80	40	16	>115	M36	2	140
040-384/XW	AU 3K6-2700 2H22 Bushing (W)	3.6	2700	95	40	16	>120	M45	2	150
040-388/XE	AU 3K6-3150 2H22 Bushing (E)	3.6	3150	95	40	16	>120	M48	2	160

*** Note:**
Detailed drawings available on request
Tank wall thickness minimum 3mm , maximum 6mm
Tank hole size tolerance is -0mm +1mm

AU HV Bushing Range

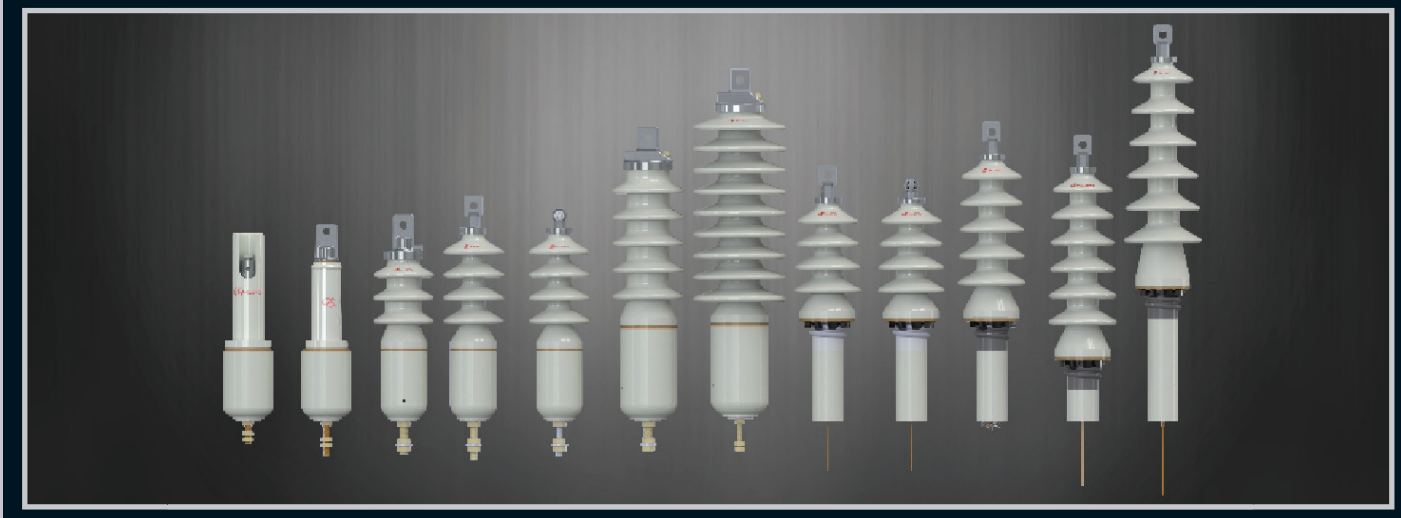

Part Number	Description	U.m (kV)	Ir (A)	Tank Hole Size (mm)	LI (kV)	ACSD (kV)	CD (mm)	Stem Thread Size	Stem Pitch (mm)	Recommended Stem Torque (N.m)
040-372/X	AU 12K-30 Bushing	12	30	70	75	30	>410	M10	1,5	-
040-372/XE	AU 12K-30 CF Bushing (E)	12	30	70	75	30	>410	M10	1,5	-
040-372/XW	AU 12K-30 Bushing (W)	12	30	70	75	30	>410	M10	1,5	-
040-385/XW	AU 12K-300A 3S Bushing (W)	12	300	60	75	30	>285	M16	2	60
040-386/XE	AU 12K-30A 4S-PF Bushing (E)	12	30	60	75	30	>345	M12	1,75	45
040-389/XE	AU 12K-30A 4S-CF Bushing (E)	12	30	60	75	30	>345	M12	1,75	45
040-394/XE	AU 12K-200 4S Bushing (E)	12	200	60	75	30	>345	M12	1,75	45
040-390/XW	AU 12K-300A 4S Bushing (W)	12	300	60	75	30	>345	M16	2	60
040-391/XE	AU 12K-160 CB Bushing (E)	12	160	60	75	30	>160	M10	1,5	15
040-392/XE	AU 12K-1050 CB Bushing (E)	12	1050	83	40	16	>135	M24	2	120
040-393/XE	AU 11K-160 Shrouded Bushing (E)	12	160	60	75	30	>160	M10	1,5	15
040-373/X	AU 24K-30 Bushing	24	30	70	125	50	>530	M10	1,5	-
040-373/XE	AU 24K-30 CF Bushing (E)	24	30	70	125	50	>530	M10	1,5	-
040-373/XW	AU 24K-30 Bushing (W)	24	30	70	125	50	>530	M10	1,5	-
040-399/XW	AU 24K-300 5S Bushing (W)	24	300	80	125	50	>480	M16	2	70
040-374/X	AU 24K-30 XS Bushing	24	30	70	125	50	>640	M10	1,5	-
040-374/XW	AU 24K-30 XS Bushing (W)	24	30	70	125	50	>640	M10	1,5	-
040-378/X	AU 36K-30 Bushing	36	30	70	170	70	>720	M10	1,5	-
040-368/X	AU 44KV-120 9S Bushing	44	120	80	170	77	>1067	M10	1,5	25

*** Note:**
Detailed drawings available on request
Tank wall thickness minimum 3mm , maximum 6mm
Tank hole size tolerance is -0mm +1mm

AU HC Bushing Range

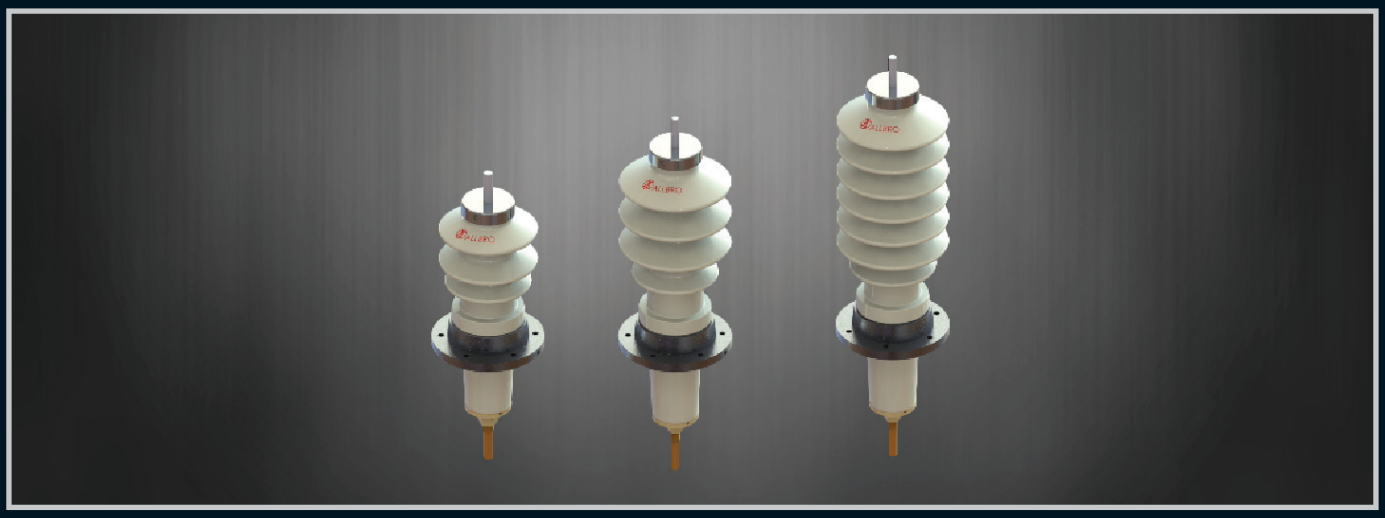

Part Number	Description	U.m (kV)	Ir (A)	Tank Hole Size (mm)	LI (kV)	ACSD (kV)	CD (mm)	Stem Thread Size	Stem Pitch (mm)	Recommended Stem Torque (N.m)
040-404/X20	AU 12K-800 3S HC Bushing	12kV	800	120	95	28	470	M20	2	100
040-404/X24	AU 12K-1050 3S HC Bushing	12kV	1050	120	95	28	470	M24	2	120
040-405/X20	AU 24K-800 4S HC Bushing	24kV	800	120	150	50	670	M20	2	100
040-405/X24	AU 24K-1050 4S HC Bushing	24kV	1050	120	150	50	670	M24	2	120
040-406/X20	AU 36K-800 7S HC Bushing	36kV	800	120	200	70	1200	M20	2	100
040-406/X24	AU 36K-1050 7S HC Bushing	36kV	1050	120	200	70	1200	M24	2	120

*** Note:**
Detailed drawings available on request
Tank wall thickness minimum 3mm , maximum 6mm
Tank hole size tolerance is -0mm +1mm

Offset Bushings

Part Number	Description	U.m (kV)	Ir (A)	Tank Hole Size (mm)	LI (kV)	ACSD (kV)	CD (mm)
040-395/X	AU 12K-30 Offset Bushing	12	30	70	75	30	>706
040-396/X	AU 12K-30 Offset Bushing	12	30	70	75	30	>660
040-397/X	AU 36K-30 Offset Bushing	24	30	70	125	50	>1036
040-398/X	AU 36K-30 Offset Bushing	24	30	70	125	50	>990

*** Note:**
Detailed drawings available on request
Tank wall thickness minimum 3mm , maximum 6mm
Tank hole size tolerance is -0mm +1mm

Wildlife Guards

The Wildlife Guards are optimized for wildlife protection on over-head distribution systems rated 25Kv and less. These guards are designed to mount securely between the first and second shed (nearest the high voltage terminal) on primary bushings and arresters.

Part Number	Description
020-040X	WLG-140
020-041X	WLG-175
020-042X	WLG-230

Bushings Installation Manual

RECOMMENDED BUSHINGS INSTALLATION

WORK INSTRUCTION PROCEDURES

The following points should be adhered to obtain a correct Bushing installation:

1. Application of the correct torque to the Top nut & Cone Rubber
2. Correct Stem Location in the Cup & Porcelain
3. Correct Cup Location in the Tank
4. That the cone rubber has sufficient sealing area on the smooth section of the stem, protruding out of the porcelain.
5. Correct and acceptable connections to bushings.

1. RECOMMENDED TORQUE SETTINGS

CONE SEALING RUBBER

BRASS NUT SIZE MM	TORQUE	
M6	2N.m	
M8	3.5N.m	Re-torque
M10	8N.m	
M12	16N.m	
M14	16N.m	After
M18	18N.m	
M20	22N.m	
M24	26N.m	48hours
M30	32N.m	
M36	40N.m	
M42	50N.m	

BRASS FLAGS

STEEL NUTS MM	TORQUE	
M10	20N.m - 25MM	Re-torque after 48hours

BASE PLATES - COPPER/STEEL

HI TENSILE STEEL NUT	TORQUE	
M12	35N.m	Re-torque after 48hours

MOUNTING STUDS - STAINLESS STEEL

CLAMPING NUTS	TORQUE	
M12	35N.m	Re-torque after 48hours
M10	12N.m	
M12	16N.m	

2. ENSURE THAT THE STEM AND CUP ARE CORRECTLY LOCATED ON THE TANK AND PORCELAIN

3. CORRECT CUP LOCATION IN THE TANK.

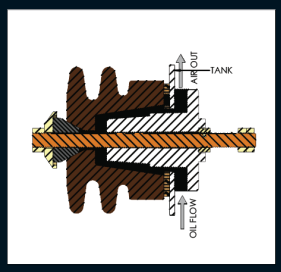

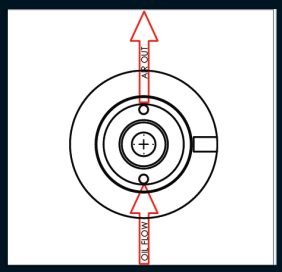

1. From Fig-2 above, the oil slots of the plug must be mounted as indicated.
2. When a slow vacuum is drawn, the air will escape through the top slot and oil will fill and flood the bushings cavity (black section in fig-1).
3. If any air is trapped in the bushing cavity, the oil insulation of that bushing is compromised and a failure in the form of a flash-over may occur.
4. Another good practice to observe is to ensure that the oil level is at least 5cm above the top perimeter of the bushing plug.

4. ENSURE THAT THE CONE RUBBER HAS SUFFICIENT SEALING AREA ON THE SMOOTH SECTION OF THE STEM, PROTRUDING OUT OF THE PORCELAIN.

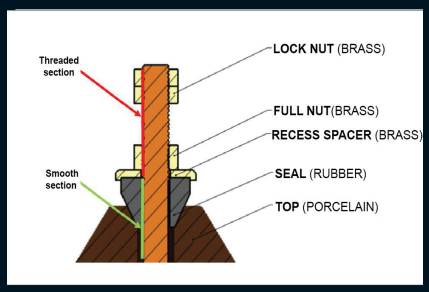

5. CORRECT AND ACCEPTABLE CONNECTIONS TO BUSHINGS

Any cables or bus-bar connections, made onto the bushings, must be done using suitable & accepted engineering practices. Care must be taken to ensure that the Cantilever Effect is minimized, on the bushing stems.

1. Cables should have enough slack and gland support.
2. Bus-bars are supported by insulators.

Bushings will start to leak if the connections are incorrectly supported

RTS = Rotary Tap Switch
LTS = Linear Tap Switch
MB = Moulded Bracket
BC = Butterfly Contact
A = LEFT HAND
B = RIGHT HAND

Rotary Tap Switches

Contact Arrangement Types

All Rotary Tap - Switches are available with two types of moving contacts as indicated below:

Butterfly Contact Arrangement

Standard Contact Arrangement

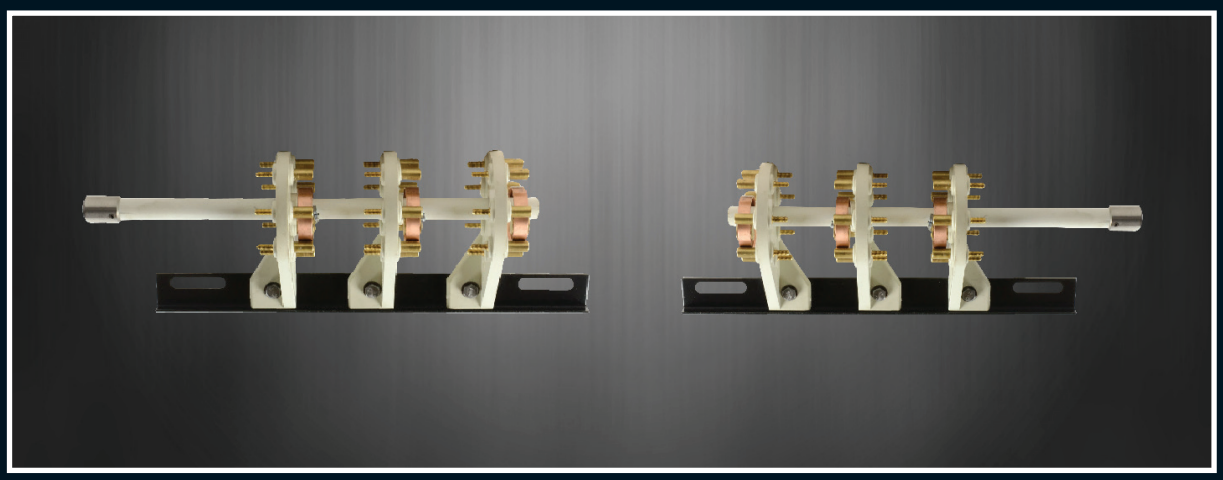

Part Number	Description	U.m (kV)	Ir (A)	Phase	Type	Bracket	Contact
040-522	RTS 22 Kv 100A 1Ph - Type A	22	100	1	A	Steel	Std
040-523	RTS 22 Kv 100A 1Ph - Type B	22	100	1	B	Steel	Std
040-508 BC	RTS 22Kv 100A 3Ph - Type A / 90° / BC	22	100	3	A	Steel	Butterfly
040-505	RTS 22Kv 100A 3Ph - Type A / MB	22	100	3	A	Moulded	Std
040-528	RTS 22Kv 100A 3Ph - Type A	22	100	3	A	Steel	Std
040-530	RTS 22Kv 100A 3Ph - Type AB	22	100	3	AB	Steel	Std
040-530 BC	RTS 22Kv 100A 3Ph - Type AB / BC	22	100	3	AB	Steel	Butterfly
040-506 BC	RTS 22Kv 100A 3Ph - Type B / 90° / BC	22	100	3	B	Steel	Butterfly
040-501	RTS 22Kv 100A 3Ph - Type B / MB	22	100	3	B	Moulded	Std
040-527	RTS 22Kv 100A 3Ph - Type B	22	100	3	B	Steel	Std

RTS = Rotary Tap Switch
LTS = Linear Tap Switch
MB = Moulded Bracket
BC = Butterfly Contact
A = LEFT HAND
B = RIGHT HAND

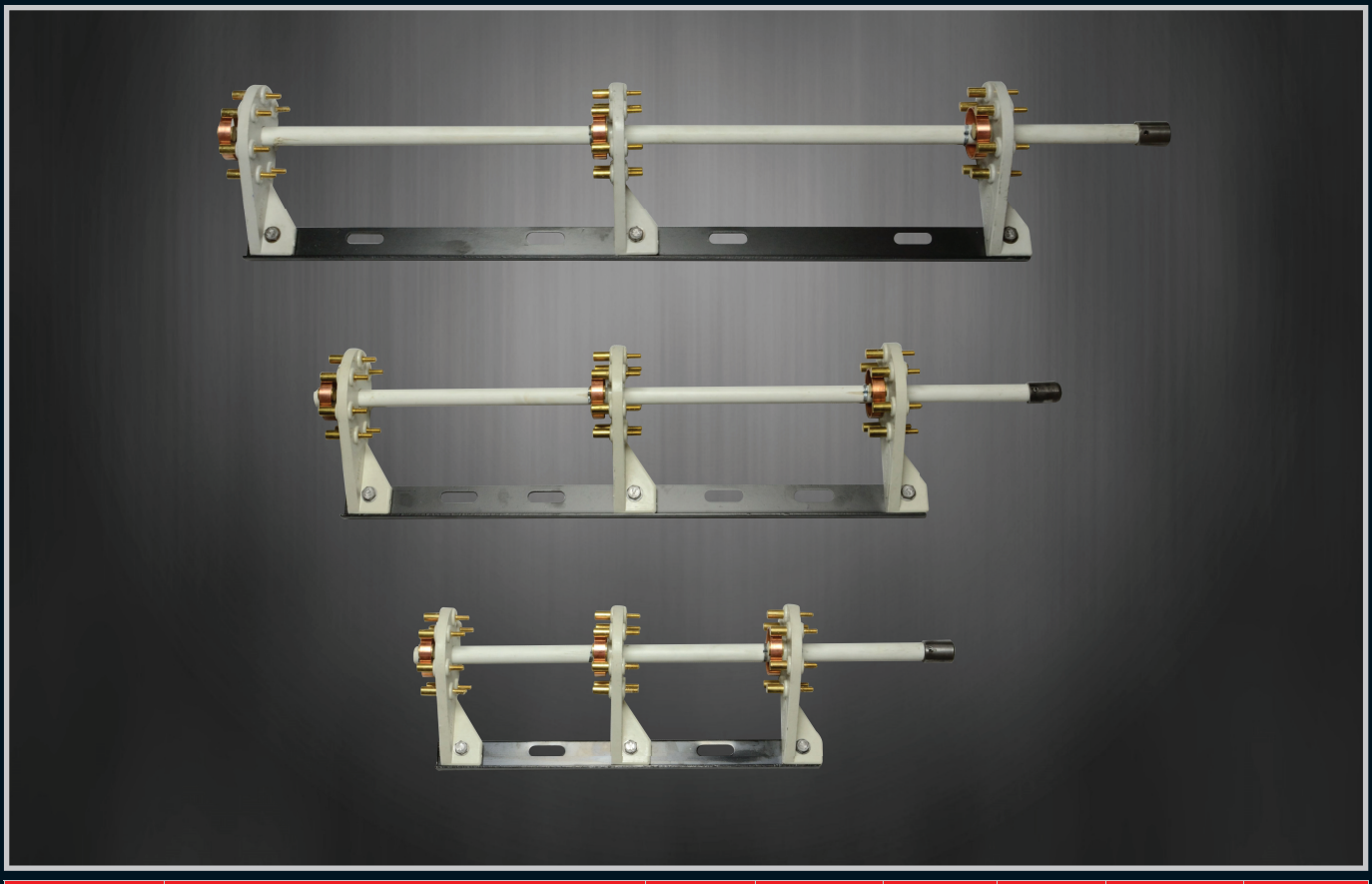

Part Number	Description	U.m (kV)	Ir (A)	Phase	Type	Bracket	Contact
040-534	RTS 22Kv 100A 3Ph (180 CNT) Type AB	22	100	3	AB	Steel	Std
040-533	RTS 22Kv 100A 3Ph (270 CNT) Type AB	22	100	3	AB	Steel	Std
040-532	RTS 22Kv 100A 3Ph (360 CNT) Type AB	22	100	3	AB	Steel	Std
040-521	RTS 22Kv 100A 3Ph (180 CNT) Type A	22	100	3	A	Steel	Std
040-518	RTS 22Kv 100A 3Ph (180 CNT) Type B	22	100	3	B	Steel	Std
040-520	RTS 22Kv 100A 3Ph (270 CNT) Type A	22	100	3	A	Steel	Std
040-517	RTS 22Kv 100A 3Ph (270 CNT) Type B	22	100	3	B	Steel	Std
040-519	RTS 22Kv 100A 3Ph (360 CNT) Type A	22	100	3	A	Steel	Std
040-516	RTS 22Kv 100A 3Ph (360 CNT) Type B	22	100	3	B	Steel	Std

RTS = Rotary Tap Switch
LTS = Linear Tap Switch
MB = Moulded Bracket
BC = Butterfly Contact
A = LEFT HAND
B = RIGHT HAND

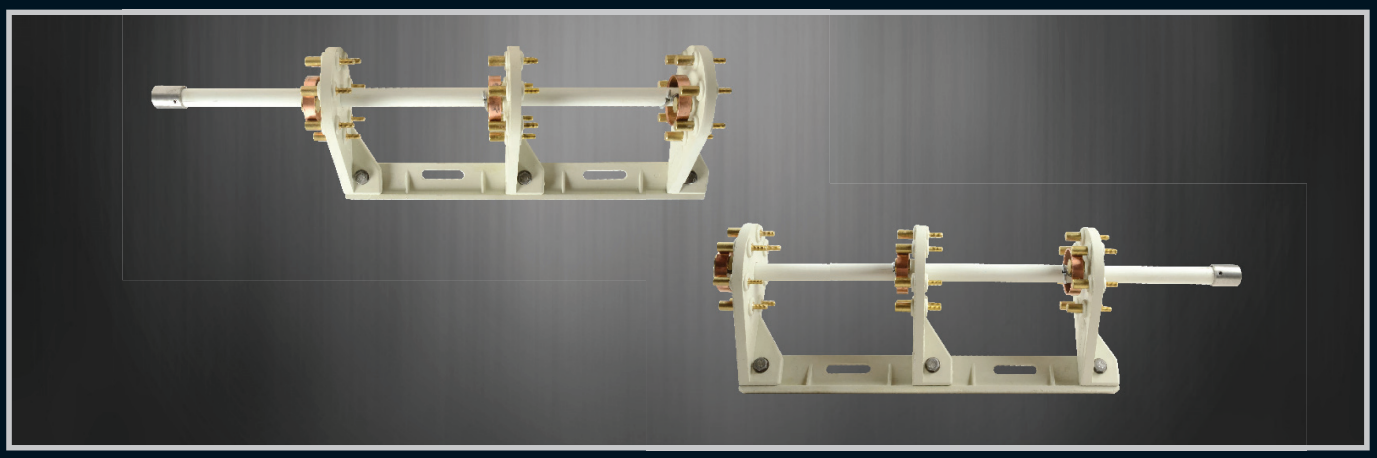

Part Number	Description	U.m (kV)	Ir (A)	Phase	Type	Bracket	Contact
040-512	RTS 33Kv 100A 3Ph - Type A / MB	33	100	3	A	Moulded	Std
040-529 BC	RTS 33Kv 100A 3Ph - Type AB / BC	33	100	3	AB	Moulded	Butterfly
040-529	RTS 33Kv 100A 3Ph - Type AB / MB	33	100	3	AB	Moulded	Std
040-500	RTS 33Kv 100A 3Ph - Type B / MB	33	100	3	B	Moulded	Std

Part Number	Description	U.m (kV)	Ir (A)	Phase	Type	Bracket	Contact
040-513	RTS 22Kv 100A 6Ph - Type A	22	100	6	A	Steel	Std
040-531	RTS 22Kv 100A 6Ph - Type AB	22	100	6	AB	Steel	Std
040-502	RTS 22Kv 100A 6Ph - Type B	22	100	6	B	Steel	Std

RTS = Rotary Tap Switch
LTS = Linear Tap Switch
MB = Moulded Bracket
BC = Butterfly Contact
A = LEFT HAND
B = RIGHT HAND

Part Number	Description	U.m (kV)	Ir (A)	Phase	Type	Bracket	Contact
040-509 BC	RTS 22Kv 150A 3Ph - Type A / 90° / BC	22	150	3	A	Steel	Butterfly
040-510 BC	RTS 22Kv 150A 3Ph - Type A / BC	22	150	3	A	Steel	Butterfly
040-511 BC	RTS 22Kv 150A 3Ph - Type B / 90° / BC	22	150	3	B	Steel	Butterfly
040-507 BC	RTS 22Kv 150A 3Ph - Type B / BC	22	150	3	B	Steel	Butterfly

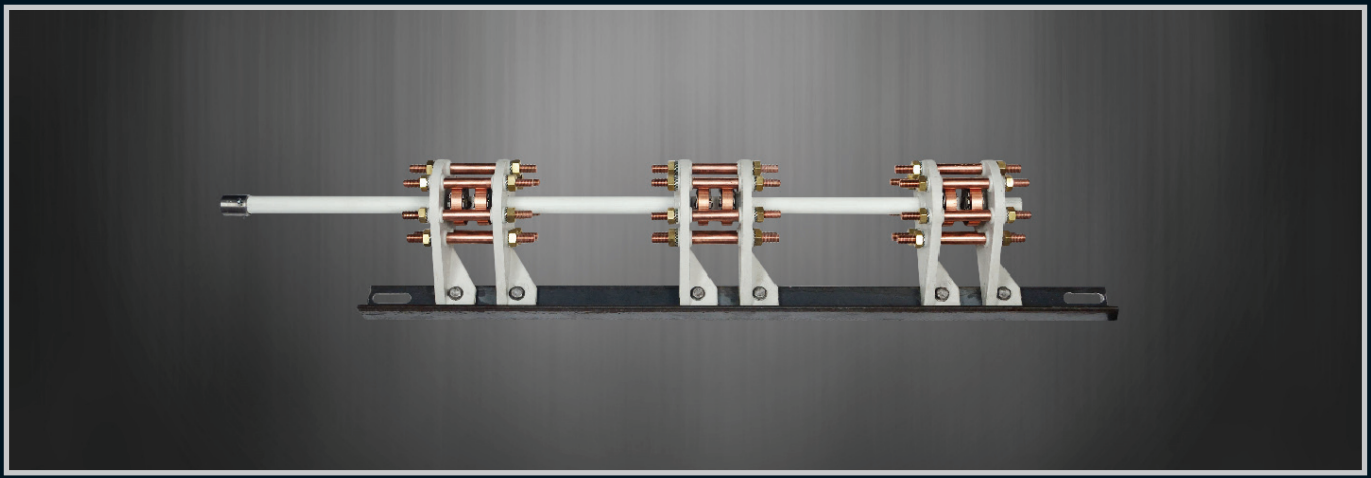

Part Number	Description	U.m (kV)	Ir (A)	Phase	Type	Bracket	Contact
040-514 BC	RTS 22Kv 300A 3Ph - Type A / BC	22	300	3	A	Steel	Butterfly
040-538 BC	RTS 22Kv 300A 3Ph - Type AB / BC	22	300	3	AB	Steel	Butterfly
040-503 BC	RTS 22Kv 300A 3Ph - Type B / BC	22	300	3	B	Steel	Butterfly
040-538 BC-M	RTS 22Kv 300A 3Ph - Type AB / M	11	300	3	AB	Steel	Butterfly

SC = Slide Contact
RTS = Rotary Tap Switch
LTS = Linear Tap Switch
MB = Moulded Bracket
BC = Butterfly Contact
A = LEFT HAND
B = RIGHT HAND

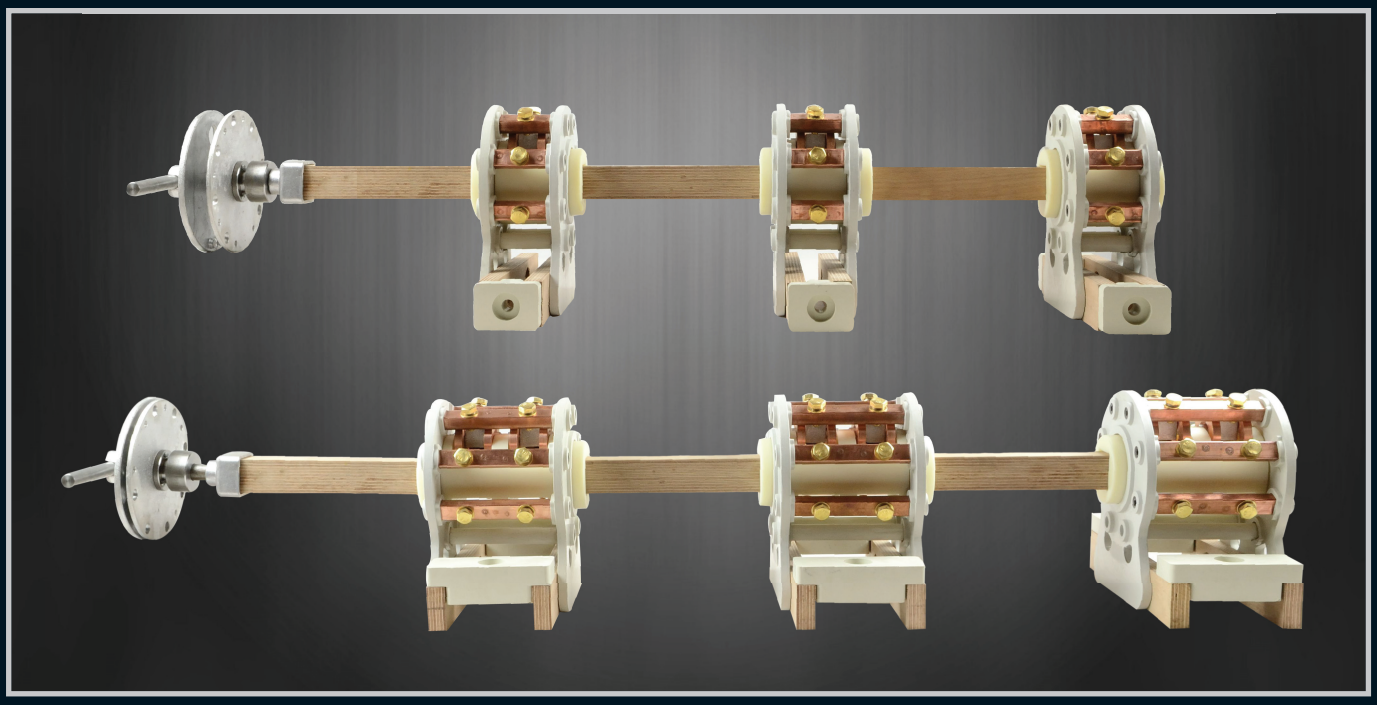

Part Number	Description	U.m (kV)	Ir (A)	Phase	Type	Bracket	Contact
040-543	RTS 88Kv 315A 3Ph - Type AB	88	315	3	AB	Permali	T - Type
040-542	RTS 88Kv 630A 3Ph - Type AB	88	630	3	AB	Permali	T - Type

Linear Tap Switches

Part Number	Description	U.m (kV)	Ir (A)	Phase	Type	Bracket	Contact
040-526	LTS 22Kv 30A 2Ph 5Pos	22	30	2	N/A	Nylon	Linear
040-525	LTS 22Kv 30A 3Ph 5Pos	22	30	3	N/A	Nylon	Linear

RTS = Rotary Tap Switch
LTS = Linear Tap Switch
MB = Moulded Bracket
BC = Butterfly Contact
A = LEFT HAND
B = RIGHT HAND

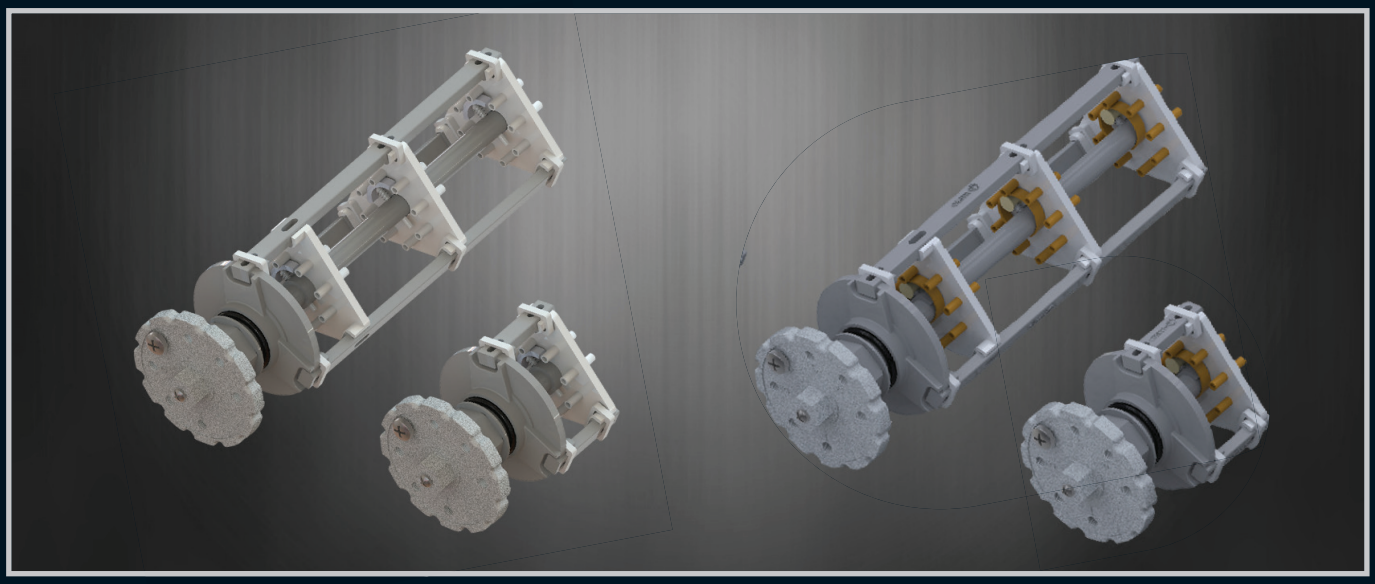

Part Number	Description	U.m (kV)	Ir (A)	Phase	Type	Bracket	Contact
040-580X	RTS 33Kv 60A 1PH 7POS - SC	33	60	1	N/A	N/A	Slide
040-581X	RTS 33Kv 60A 3PH 7POS - SC	33	60	3	N/A	N/A	Slide
040-585X	RTS 33Kv 60A 1PH 7POS - RC/DP	33	60	1	N/A	N/A	Slide
040-586X	RTS 33Kv 60A 3PH 7POS - RC/DP	33	60	3	N/A	N/A	Slide

Part Number	Description	U.m (kV)	Ir (A)	Phase	Type	Contact
040-582/X	RTS 33Kv 60A 3Ph 7POS - SC/SP	33	60	3	AB	Slide
040-594/X	RTS 11/6K6 60A 3PH 2POS - SC/SP	11/6	60	3	AB	Slide
040-595X	RTS 22Kv 150A 3PH 7POS - SC/SP	33	150	3	AB	Slide

Tapswitch Information & Installation Manual

1. INFORMATION

1.1 Information:

A tap changer is a mechanism in transformers which allows for variable turn ratios to be selected in discrete steps.
This mechanism makes it possible to obtain a variable turn ratio, by connecting to a number of access points known as taps along either the primary or secondary winding.

Tap changers exist in two primary types:

1. No load tap changers (NLTC) which must be de-energized before the turn ratio is adjusted.
2. On load tap changers (OLTC) which may adjust their turn ratio during operation.
   Allbro manufactures NLTC's, up to a maximum rated voltage of 88Kv and 630A. NLTC's operate and are manufactured in two types of formats: Rotary & Linear.

1.2 NLTC Defining Parameters:

There are FIVE parameters that define NLTC's:

1. Voltage (in kV): Typically 11, 22, 33 or 88.
2. Current (in Amperes): Typically 60A, 100A, 150A, 300A, 315A and 630A.
3. Number of Phase Panels: Typically 3, 6 up to a maximum of 9.
4. Number of Positions: Typically 5, 6 or 7.
5. Orientation: Type A, (left Hand) or Type B (Right Hand).

2. INSTALLATION & FITMENT RECOMMENDATIONS:

2.1 Correct mounting of the NLTC's, rated up to 22kV:

Up to 22kV, all NLTC's are supplied with metal "L" Base Brackets, typically with mounting slots, for ease of spacing & alignment.

2.2 Correct mounting of the 33kV NLTC's:

These NLTS's are easily identified by their DMC or Permali Base Brackets. These materials assist in Achieving a higher arcing distance, from phase to earth. It is therefore critical that these NLTC's are correctly mounted, to ensure that no failures occur.

Below is a picture of a 33Kv Switch, indicating the CORRECT mounting points, to the core.The flash-over distance is 105mm

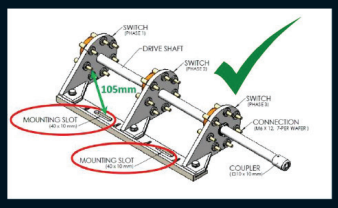

Below is a picture of a 33Kv Switch, indicating the INCORRECT mounting points, to the core. The Flash-over distance is reduced to 50m

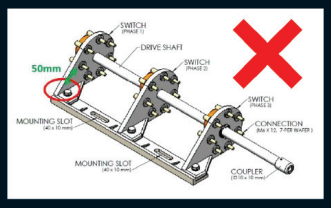

2.3 Recommended Connecting Methods:

One of the biggest causes of failures, is when arcing distances are compromised. In this case, we are referring to the arcing distance from phase panel connections, to the mounting bracket.
The potential difference between these two points is typically more than 11kV.

There are three precautions to take :

1. Quality of Insulation Paper Tube, that covers the winding wires, from the core section to the NLTC.
2. Routing of connections : Where possible, Winding Connections to the phase panel should be made at 90' to the edge of the phase panels.

3. Insulating of the Lugs: the crimped sections of the lugs need to be adequately Insulated, either by the use of approved heat shrink or the use of Lace tie-down.

2.4 Recommended Torque settings for threaded:

The contact pins are typically made from brass or copper. Over-tightening of these may cause the thread to strip or break.Our recommended torque settings are listed below:

Thread Size	Torque
M6	3.0 Nm
M8	5.0 Nm
M10	10 Nm
M12	16 Nm

The Mounting Bracket Nyloc Nuts must be torqued to 15 Nm

2.5 NLTC Alignment Precautions:

Please note that the NLTC phase panels are carefully aligned and set by Allbro,ensuring that all the selectable positions make proper contact. The warranty will be invalid if a customer dismantles the switch and then re-assembles it.

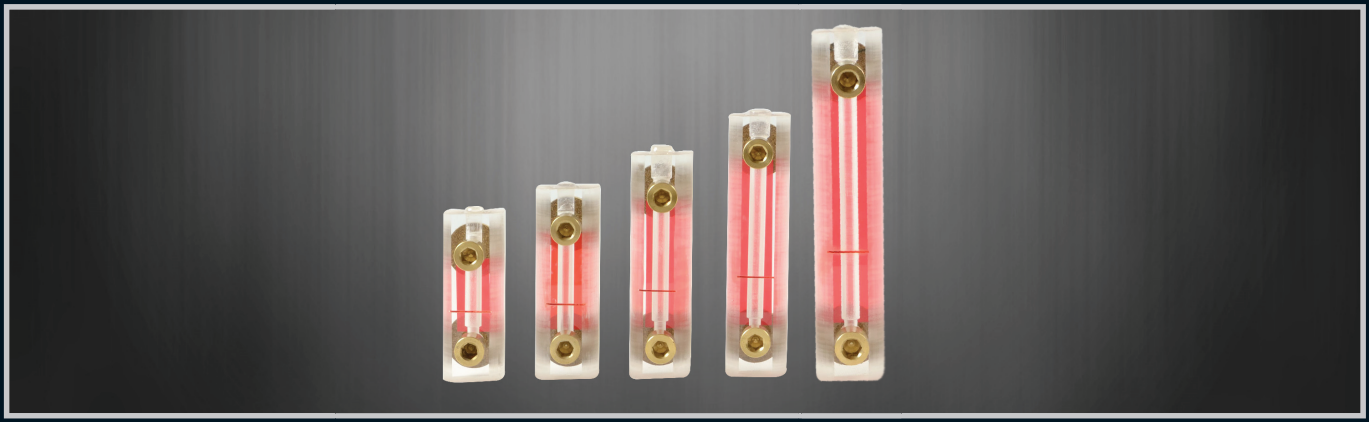

Part Number	Description	Bolt Centers	Total Length (mm)	Line Height (mm)
LOG-50	Oil Gauge 50	50	90	17
LOG-63	Oil Gauge 63	63	103	21
LOG-80	Oil Gauge 80	80	120	27
LOG-100	Oil Gauge 100	100	140	33
LOG-125	Oil Gauge 125	125	165	42
LOG-144	Oil Gauge 144	144	184	48
LOG-180	Oil Gauge 180	180	220	60
LOG-230	Oil Gauge 230	230	270	77
LOG-288	Oil Gauge 288	288	328	96
LOG-360	Oil Gauge 360	360	400	120

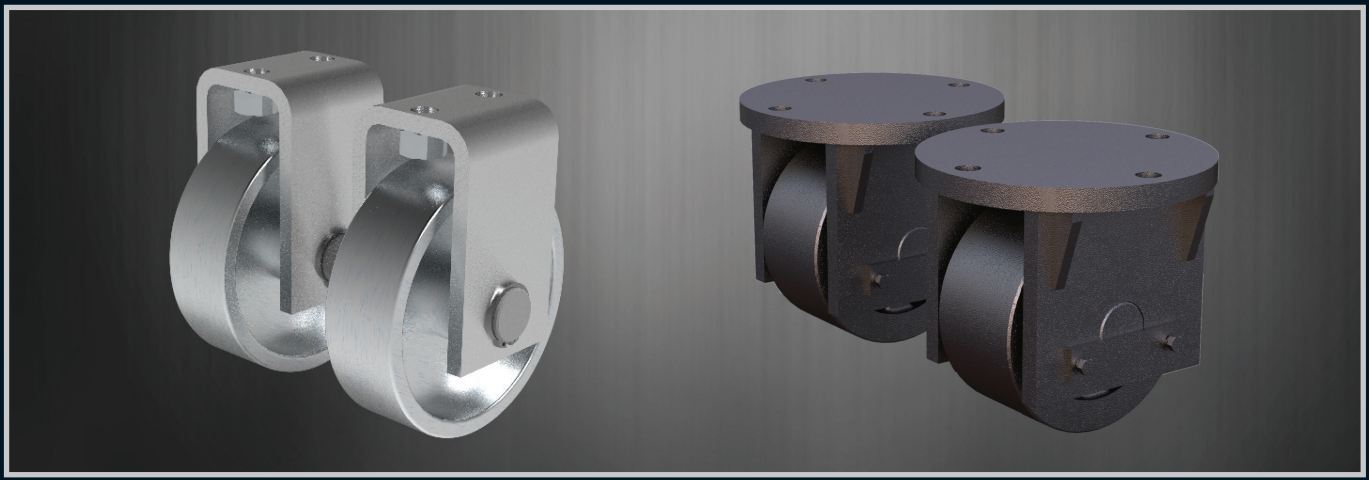

						Material			
Part Number	Description	Wheel Outside Diameter (mm)	Wheel Thickness (mm)	Housing Width (mm)	Tank Fixing	Wheel	Housing	Axle	Max Allow Mass
021-700	Transformer Wheel 125x6 2.5T	125	6	70	2 x M12	Cast Iron	Steel	Stainless Steel	3.15T
021-701	Transformer Wheel 160x8 3.5T 2xM16	160	8	80	2 x M16	Cast Iron	Steel	Stainless Steel	5.3T
021-702	Transformer Wheel 200x8 6.0T	200	8	120	2 x M16	Cast Iron	Steel	Stainless Steel	12T
021-703	Transformer Wheel 160x8 3.5T 1xM20	160	8	80	1 x M20	Cast Iron	Steel	Stainless Steel	5.3T
021-704	Transformer Wheel 300x20 25T 4x38D	300	20	145	4 x 38D	Cast Iron	Steel	Stainless Steel	25T
021-705	Transformer Wheel 200x20 10T 4x22D	200	16	120	4 x 22D	Cast Iron	Steel	Stainless Steel	10T

Part Number	Description
021-402	0.5” Ball Valve Only (15mm)
021-419	15mm Ball Valve - Lockable Single R/ Flange
021-406	1” Ball Valve Only (25mm)
021-420	25mm Ball Valve - Lockable Single R/ Flange
021-421	2” Ball Valve - Lockable Single R/Flange

Part Number	Description	Thread
002-059	0.5” Brass Plug	0.5” BSP
002-136	0.75” Brass Plug	0.75” BSP
002-055	1” Brass Plug	1” BSP

Part Number	Description	Orifice ø (mm)	H (mm)	L (mm)	No. of Studs	Stud Size (mm)	Stud PCD (mm)	Stud CTC (mm)
040-368	Radiator Valve 80x125	73	125	125	4	16	125	88
040-367	Radiator Valve 80x138	76	138	138	4	16	146	103

Part Number	Description	Orifice ø (mm)	H (mm)	Thread
002-057	20mm Weld on Boss	20	30	M12
002-058	25mm Weld on Boss	25	30	M12
002-057GI	High grade Stainless 20mm Weld on Boss	20	30	M12
002-058GI	High grade Stainless 25mm Weld on Boss	25	30	M12

Silica Gel:
The breathers contain the latest EU & ESKOM specified grade of gel.

Part Number	Description	Capacity (L)
021-600	SA90	1600
021-601	SA100-1	2400
021-602	SA100-2	3800
021-603	SA100-3	5700
021-604	SA100-4	7600
021-605	SA100-5	9600
021-606	SA100-6	11600

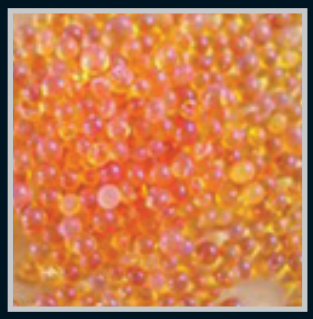

Amber Silica Dehydrating Gel

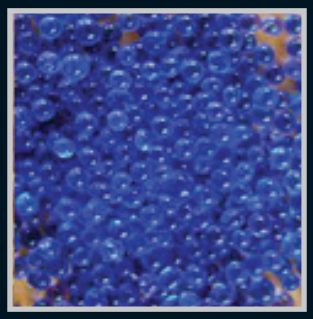

Blue Silica Dehydrating Gel

Part Number	Description
001-056	Blue Silica Dehydrating Beads (per kg)
001-307	Amber Silica Dehydrating Beads (per kg)

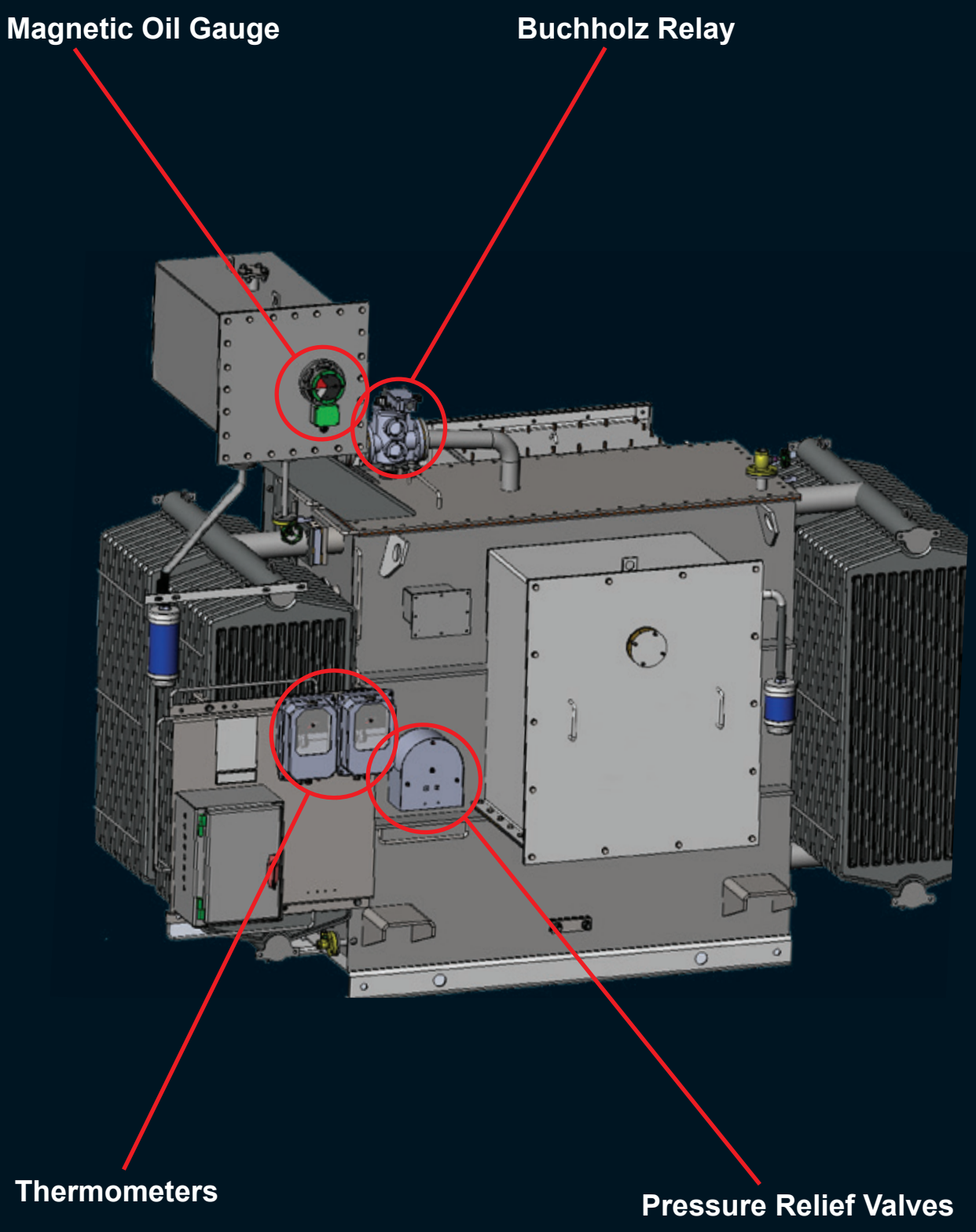
Magnetic Oil Gauge
Buchholz Relay
Thermometers
Pressure Relief Valves

Indication Only Thermometers

Part Number	Description	Range (°C)
021-002	Thermometer BM80	0 to 120
021-003	Thermometer BM100)	0 to 120

Thermometers with Contacts (for Telemetry)

Part Number	Description	Range (°C)	No. of Contacts	Type of Contact	Bulb Type
021-012	Thermometer F035-AKM Bi Metal 2C	0 to 120	2	Change Over	Direct Mount
021-005	Thermometer 1184	0 to 120	2	Normally Open	Direct Mount
47080-4-1	Contact Thermometer Cable Entry 46611,46948-1	0 to 120	2	Normally Open	Direct Mount
021-008	Thermometer MTVT 84	0 to 120	2	Change Over	Direct Mount
021-006	Thermometer 1187	0 to 120	2	Normally Open	1.5m Capillary
021-018	Thermometer 1187-T Spring mounted	0 to 120	2	Normally Open	1.5m Capillary
021-019	Thermometer 1187 3.0M 2 CO S/MNT	0 to 120	2	Change Over	3.0m Capillary
021-020	Thermometer 1187 6.0M 2CO S/MNT	0 to 120	2	Change Over	6.0m Capillary

We stock different variations of the oil & winding temperature thermometers. The configurations are shown below, others are available on request.

1) Capillary length, where 6 & 12 meters are the standard.
2) Number of contacts, where 2 and 4 are the standard. *up to 6 available on request.
3) TD50 Matching Resistance for WTi's.
4) Remote outputs: The TD111 & TD66 are standard outputs.

If your requirements do not match our standard configuration, kindly request a OTiWTi configuration form from your Sales Representative.

Description	Range (°C)	No. of Contacts	Type of Contact	Bulb Type
Thermometer F036-AKM Oti 2C 5M	0 to 120	2	Change Over	5m Capillary
Thermometer F036-AKM Wti 2C 5M	0 to 120	2	Change Over	5m Capillary
Thermometer F036-AKM Oti 4C 12M	0 to 120	4	Chnage Over	12m Capillary
Thermometer F036-AKM Wti 4C 12M	0 to 120	4	Change Over	12m Capillary

Pocket Housing and Boss Assembly

Remarks:
Suggested tank hole size 27mm Diameter.

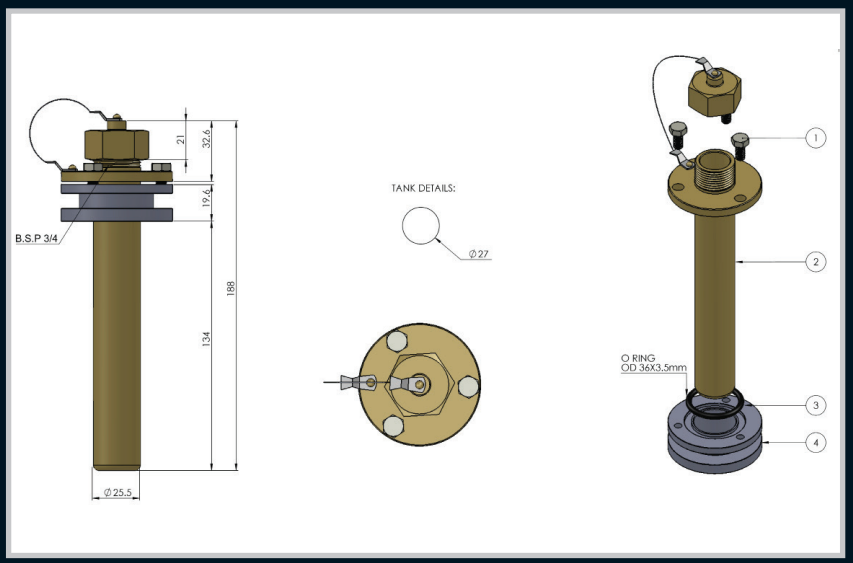

Part Number	Description
021-001	Temperature Pocket Housing and Boss

NEW

ESKOM SPEC BUCHHOLZ BS25

FIRST BUCHHOLZ RELAY
to comply to the Rev 2 Eskom Spec

- Tested and verified compliance to Eskom's latest specification: 240-56063908 Rev 2
- Anodised and hard baked C5M coated enamel - for high corrosive environments.
- Stainless steel fasteners throughout with thread lubrication.
- Accurate low tolerance gas accumulation functionality for alarm, trip and surge flow.
- Serialized test calibration certificate included.
- Protective double layered packaging for shipment protection.
- IP65 (Buchholz Relay is sealed)
- **MADE IN SA BY ALLBRO**

BS 25

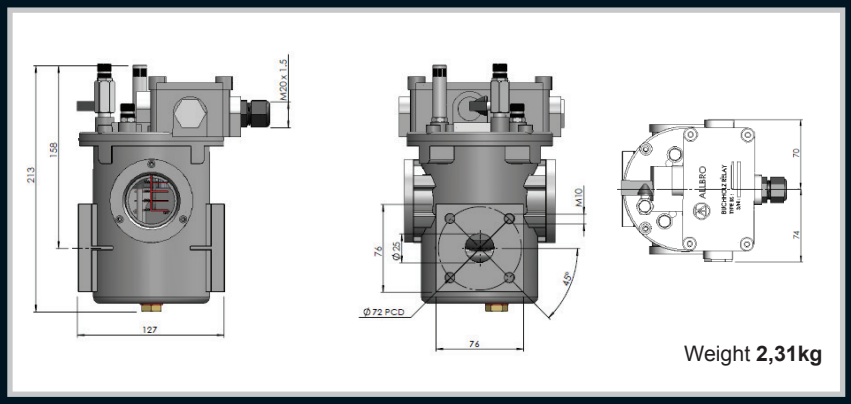

Remarks:
• MA = Magnetic - normally open contacts

Part Number	Description
021-115	Buchholz Relay Model BS25MA
021-115/E	Buchholz Relay BS25MA / E Eskom Spec 240-56063908 Rev 2
021-400	Buchholz Valve 25mm
021-426	Buchholz Valve 25mm (60mm FTF) with lockable handle

BS 50

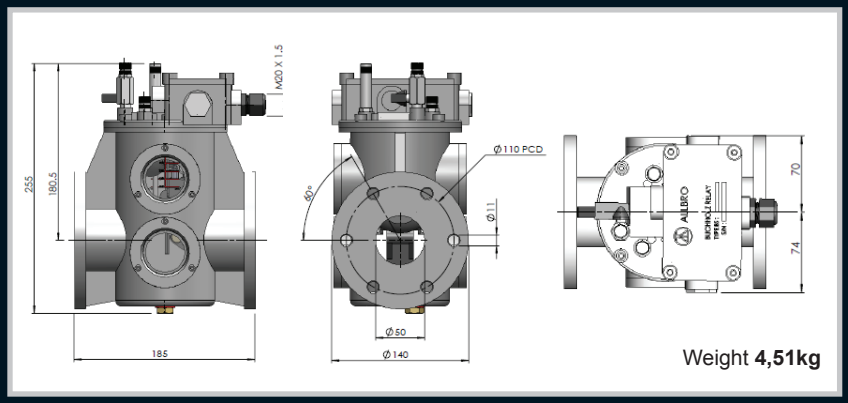

Remarks:
• MA = Magnetic - normally open contacts

Part Number	Description
021-117	Buchholz Relay Model BS50MA
021-117/E	Buchholz Relay BS50MA / E
021-401	Buchholz Valve 50mm
021-427	Buchholz Valve 50mm (60mm FTF) with lockable handle

BS 80

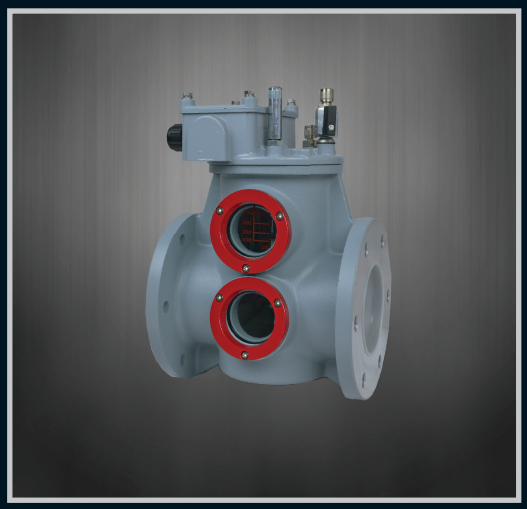

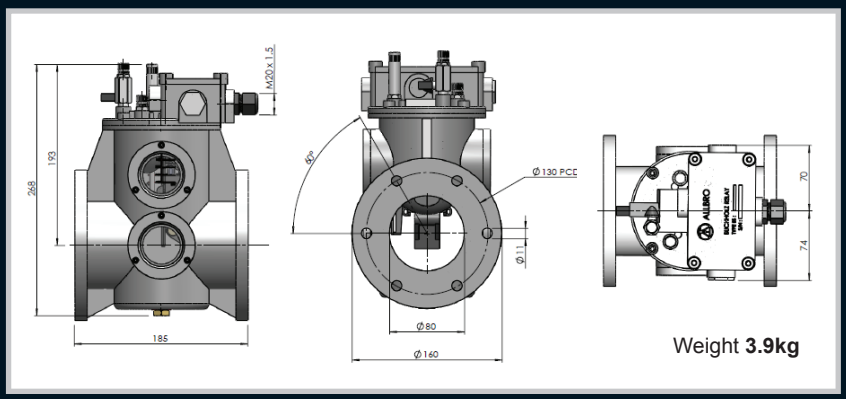

Part Number	Description
021-119/E	Buchholz Relay BS80MA / E

WHAT IS A BUCHHOLZ RELAY?

Buchholz Relays are essentially a gas detection relay. They are placed on transformers, that are equipped with a conservator tank. The vast majority of the failure / fault conditions in transformers are associated with “gassing” which is detected by the Buchholz Relay which will provide early indication by means of an alarm and subsequently a trip contact to protect the transformer from catastrophic failure.

Allbro’s Buchholz Relay complies with the latest CENELEC EN 50216-2 and EN 50216-2 standards.

HOW DOES A BUCHHOLZ RELAY WORK?

The Buchholz Relay is fitted in the pipework between the transformer itself and the conservator at a 2.5 to 5 degree angle. During normal transformer operation the relay allows oil flow between the conservator and the main tank and it is filled with oil. However, a fault within the transformer will result in gas being generated within the transformer. Gas being lighter in density then oil, the gas rises towards the conservator and collects in the upper chamber of the relay. The result is an oil level drop within the relay. The top float drops and triggers an alarm switch. Should no effective remedial action take place after the alarm, and should the transformer continue gassing the build-up of gas within the Buchholz relay will result in a trip.

The Relay is designed to trip immediately on a sudden oil surge. A large sudden fault, like a short circuit, will instantly raise the temperature of the oil and force oil up the piping through the relay at a high velocity. This sudden surge is detected by the Buchholz Relay.

CONSTRUCTION

Made from aluminium the main body of the relay is fitted with tempered glass windows to allow for visual indication of the oil level. The oil drain plug is located at the bottom of the main body for drainage when required.

The mechanism of the Relay consists of two floats, the magnetic reed switches, a surge flow valve and two permanent magnates.

Positioned on the lid of the Buchholz Relay are the following;
- Gas discharge valve with “G/8” in male thread with a protective cap
- Manual valve for pneumatically testing the alarm and insulation circuits also with a protective cap
- Push rod for mechanically tripping the alarm and the insulation circuits, also with a protective cap,
- Terminal box, containing 4 numbered M6 terminals and one earth terminal.

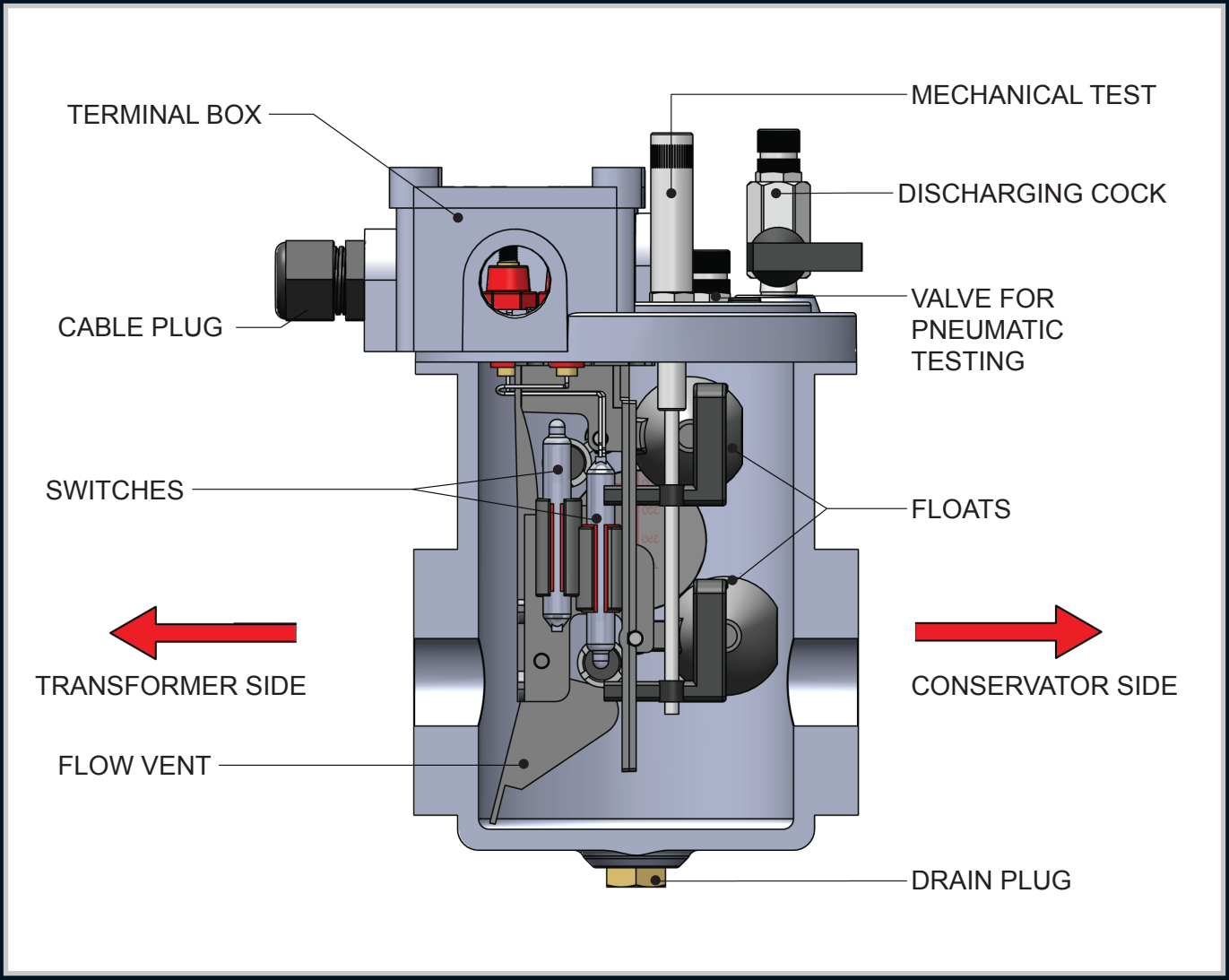

EXTERNAL COATING AND PROTECTION

The external housing of the Buchholz Relay is made from aluminium alloy. A phosphate treatment is used to clean the housing before application of a vinyl enamel. 72 hour salt spray tests have shown that this coating provides a protection layer from corrosion and resistance against most atmospheric conditions. All external fittings are brass plated and nuts are made from stainless steel. For extremely corrosive conditions due to extreme high salt spray or high acidic atmospheres, Allbro have treated our Buchholz relay units with anodized C5M coating, with stainless fittings. This model conforms to the latest Eskom requirements.

RELAY SELECTION

The size and type of relay to be used will depend on the transformer rating and oil volume. Suggestions are given in the following table but the final choice is often as a result of the transformer manufacturers experience.

MVA Transformer Power	Nominal Diameter
Up to 5	25
From 5 up to 20	50
From 20 to 50	80

TECHNICAL DATA

- **Recommended angles for Buchholz Relay pipework between main tank and conservator**

- The relay pipework is typically mounted at 2,5 degrees to the horizontal. A positive inclination of up to 5 degrees to the horizontal axis is admissible.

- Operating pressure - 1 bar, tested to 2,5 bar for 2 minutes at 100 deg C.

- Gas volume to trip alarm:

Buchholz Relay Type	Gas Volume Necessary to Activate Switch	Tolerance	Trip	Tolerance
BS 25	150 ± 50 cm³	Min 100 Max 200	300 ± 50	Min 250 Max 350
BS 50	300 ± 50 cm³	Min 250 Max 350	700 ± 100	Min 600 Max 800
BS 80	400 ± 100 cm³	Min 300 Max 500	800 ± 100	Min 700 Max 900

- Rate of oil flow in m/s to trip insulation. In the following table standard values are highlighted with an 'O' available, on request with an 'X' and not available with a '//'. +/- 15% tolerance at 20°C with oil viscosity according to IEC296.

Inside Pipe Diameter	1,0 m/s	1,5 m/s	2,0 m/s
25	o	x	x
50	o	x	x
80	o	x	x

- The relay operates within 0,5 seconds.
- Oil temperature between -25 and +115 deg C.
- Ambient temperature between -25 and +60 deg C.
- Degree of Protection IP65 to EN 60529.

SWITCH ELECTRICAL DATA

Specification	Values
Max. switching current DC	3A
Max. switching current AC	5A
DC load min. 5 - max. 250 V min. 100 000 operations	250 VA
AC load min. 5 - max. 250 V min. 100 000 operations	400 W
DC load min. 5 - max. 250 V min. 10 000 operations	1.250 VA
AC load min. 5 - max. 250 V min. 10 000 operations	1.500 W
Min. switching current	5 mA
Dielectric withstand circuits-earth	Short Duration min. 2,5kV
Dielectric withstand open contracts	Short Duration min. 1,5kV
Working temperature	-40°C - +135°C

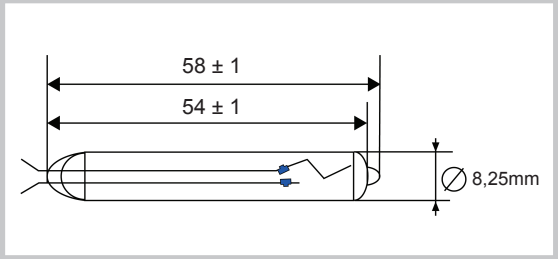

The following Type Tests have been performed on the relay.

- 72 hour salt spray
- Electromagnetic Field Test. Relay does not trip in field strength up to 25mT (ref EN 50216-2)
- Stationary sinusoidal mechanical vibrations. Tests according to EN 60721-3-4 standards have been performed.

(a) Class 4M4 (4M6 on request) vibration test applied in sites where vibrations are transmitted from machinery and vehicles. Three-axis movement was impressed to the relay using special equipment with stationary sinusoidal vibrations from 2 to 200 Hz.

(b) A seismic test has also been performed on each unit according to the EN 50216-1 standards that refers to EN 60068-3-3 class 0, level 2 standards. The test consists of application of a 9m/s2 horizontal acceleration and a 4.5m/s2 vertical acceleration, increasing frequency one octave per minute. No activation of alarm or release switches was encountered.

- Pressure withstands Tests 2.5 bar for 2 minutes with oil at 100°C.
- Vacuum Withstand Test of 2500Pa for 24 hrs.
- Test to show the relay is insensitive to oil flow from conservator to transformer.

FUNCTIONAL TESTS

The following Functional Tests are applied to all relays.

- High Pressure Leak test @ 2.5 Bar
- Oil Flow Test (meters/sec trip Value).
- Gas Accumulation Alarm Value (volume in cm^3).
- Gas Accumulation Trip Value (volume in cm^3).
- Press-To-Test Function Test
- Temperature Rise Test over 48 hours
- Efficacy of seal verified with transformer oil (at 80°C) at a pressure of 1.0 bar. This test ensures that the relay meets the required EN Standards.

* Allbro's Buchholz Relay Mechanical & Electrical verification of float and switch functionality

* Allbro's Buchholz Relay -Main functional test.

* Allbro's Buchholz Relay efficacy of seal test

INSTALLATION INSTRUCTIONS

The following installation procedures must be observed for proper relay operation:

- The red arrow on the relay must point towards the conservator.
- The relay must always be full of oil, which means that the minimum oil level in the conservator must be higher than the relays breather valve.

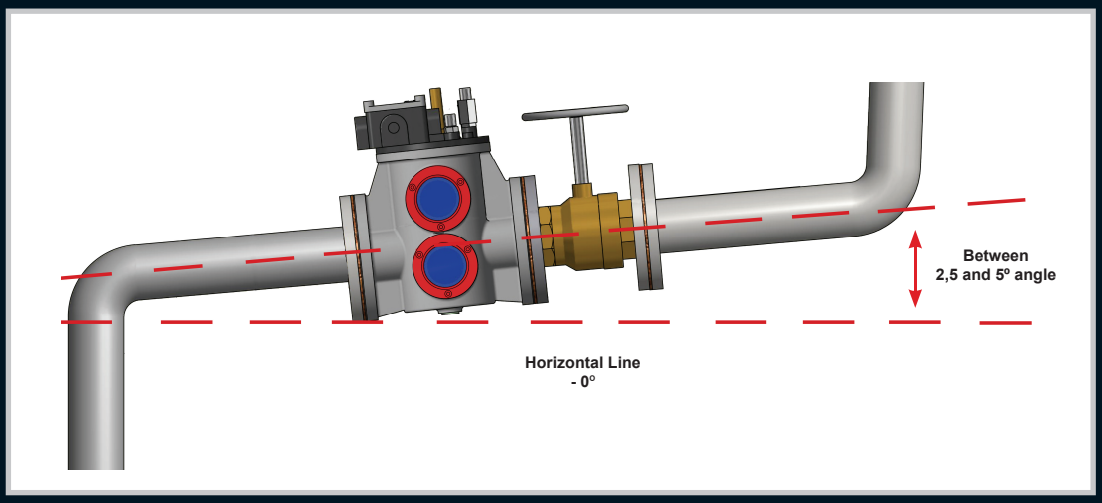

- The recommended inclination of the relay pipework is 2.5 degrees from the horizontal.
- The pipe from the transformer to the relay must exit the transformer at the highest point.
- The pipeline upstream from the relay has to be straight and with a length equal to 5-10 times the pipeline diameter, at least.
- Down stream from the relay, pipeline length has to be 3 times the pipeline diameter, only. It must rise up towards the conservator.
- M5 connections in terminal box must be tightened to a maximum of 2NM torque.

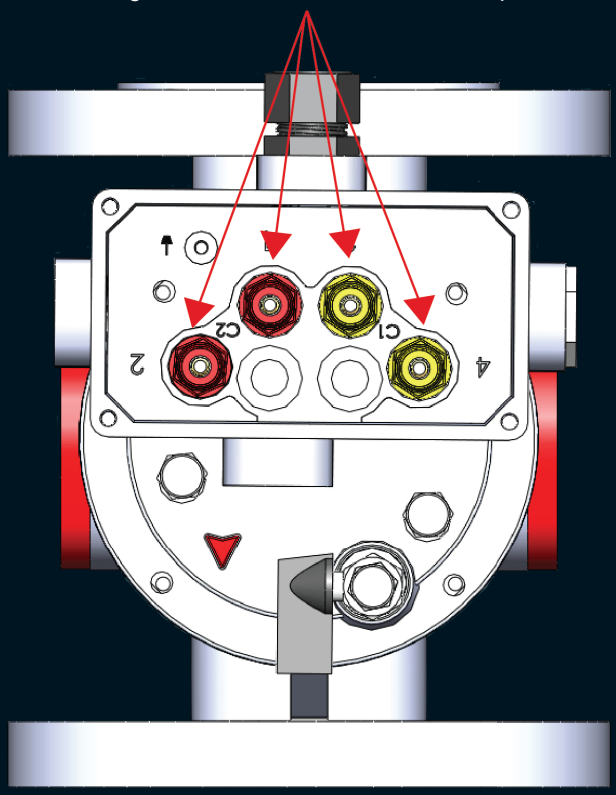

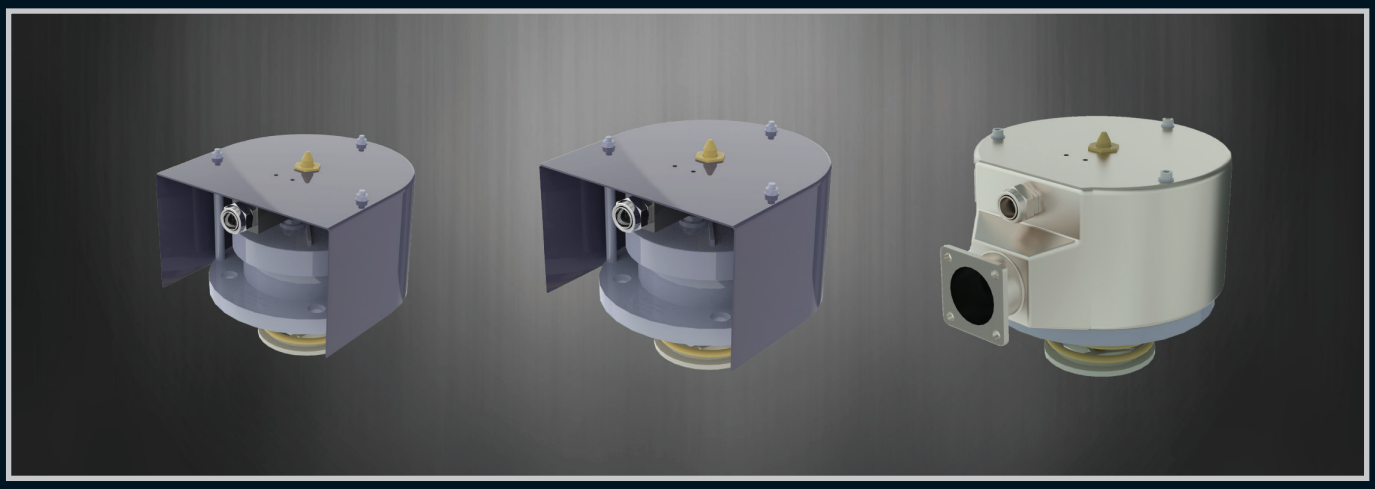

Pressure Relief devices/valves are typically classified in the Transformer industry as safety or protection devices.

The application of these devices is to limit a sudden rise in oil pressure, inside a free-breathing oil cooled Transformer tank. The device will operate when the inside oil-pressure is greater than that of the set pressure. The device has a directional cover that will allow any hot oil to be safely expelled. The device will then close and seal, preventing any further loss of oil, preventing excessive mechanical stresses on the tank walls.

ALLBRO Pressure Relief Devices are manufactured, tested and assembled at our factory in the East of Johannesburg, South Africa.

CONSTRUCTION

For durability and reliability, the body and cap of the devices are manufactured from powder-coated, moulded aluminium. Two of Allbro's PRV models have the standard Powder-coated mild steel covers. Allbro also manufactures a Corrosion Resistant device known as the T80SS. Where the cover encloses the unit completely, the cover is made from is 316 Stainless steel.

INDIVIDUAL TESTING OF DEVICES

As part of our testing process, all devices are 100% tested, given a serial number and supplied with a test report.

Each device is tested and checked for:

- Operational Function test, this test ensures that the device operates at the required pressure, using compressed air and a calibrated pressure gauge.
- Efficacy of seal test, this test is to ensure that the device does not leak. Each device is subjected to an 8 hour soak test in oil, at 70°C and at 20 KPa pressure.
- Final Switch check, to ensure that the contacts change-over on operation of the device.

Below is an example of the test apparatus and a typical Test Report, supplied with each device:

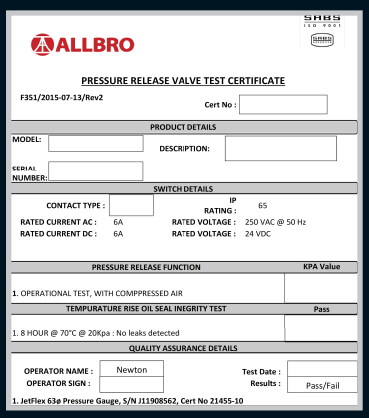

ALLBRO

PRESSURE RELEASE VALVE TEST CERTIFICATE

F351/2015-07-13/Rev2

Cert No :

PRODUCT DETAILS

MODEL:

DESCRIPTION:

SERIAL NUMBER:

SWITCH DETAILS

CONTACT TYPE :

IP RATING : 65

RATED CURRENT AC : 6A

RATED VOLTAGE : 250 VAC @ 50 Hz

RATED CURRENT DC : 6A

RATED VOLTAGE : 24 VDC

PRESSURE RELEASE FUNCTION	KPA Value
1. OPERATIONAL TEST, WITH COMPPRESSED AIR	

TEMPURATURE RISE OIL SEAL INEGRITY TEST	Pass
1. 8 HOUR @ 70°C @ 20Kpa : No leaks detected	

QUALITY ASSURANCE DETAILS

OPERATOR NAME : Newton

OPERATOR SIGN :

Test Date :

Results : Pass/Fail

1. JetFlex 63ø Pressure Gauge, S/N J11908562, Cert No 21455-10

* Allbro's in-house PRV Efficacy of seal test & Operational Function Test equipment

DEVICE SELECTION GUIDE

1. Device Size: Allbro offers TWO sizes of devices. The size required is dependant on the volume of oil that is required to be discharged.
• T50 for volumes up to 3,000 liters.
• T80 for volumes up to 9,000 liters.

2. Device Operating Pressure
It remains the responsibility of the customer to ensure that the correct pressure setting is requested, depending on the application of the device. The location of where the device is mounted on the transformer, will determine which pressure setting is required.

We offer FIVE operating pressures for both the T50 & T80 devices, depending on customer requirements.

Below is a table showing available pressures:

KPA	Psi
50	7
70	10
90	13
125	18
150	21

DEVICE INSTALLATION RECOMMENDATIONS

• Ensure that the mounting flanges are clean before mounting the device.
• The 4x Mounting studs should be crossed-torqued and tightened to a maximum of 60Nm. Over-torquing may crack the device housing.
• The opening of the device cover should always be orientated towards areas that are designed to accommodate a possible burst of hot oil.

When mounting the device on the side walls of a transformer , the device bleed screw should always be orientated towards the highest point of device. This will allow for the device to bleed should there be any air trapped inside the device, after the transformer is filled with oil

LIMIT SWITCH DETAILS

A Limit Switch is mounted internally, between the operating device and the cover.
The electrical specifications of the shown below

SPECIFICATION	
Rating	500V
Shock withstand	50g
Impulse withstand voltage	6kV
Working temperature	-25°C to +70°C
Switching Frequency	3600 cycles/h
Load Factor	0.5
Short circuit Protection	10A gG fuse

A typical limit Switch Configuration is shown below. Other configurations are available on request.

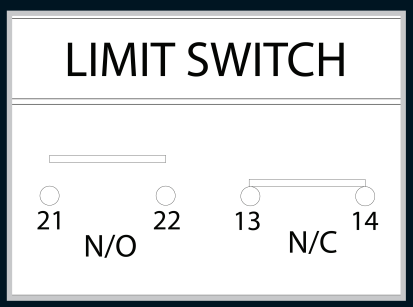

T50

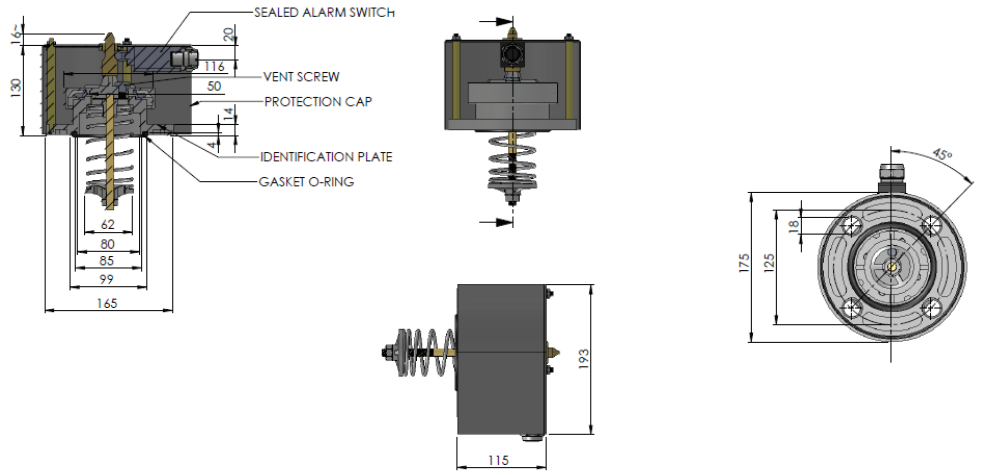

T80

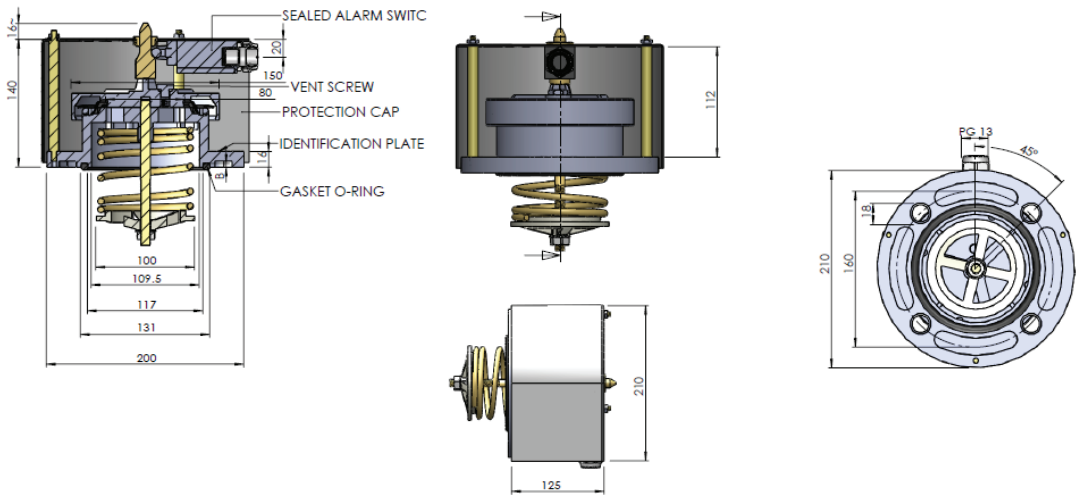

T80 SS

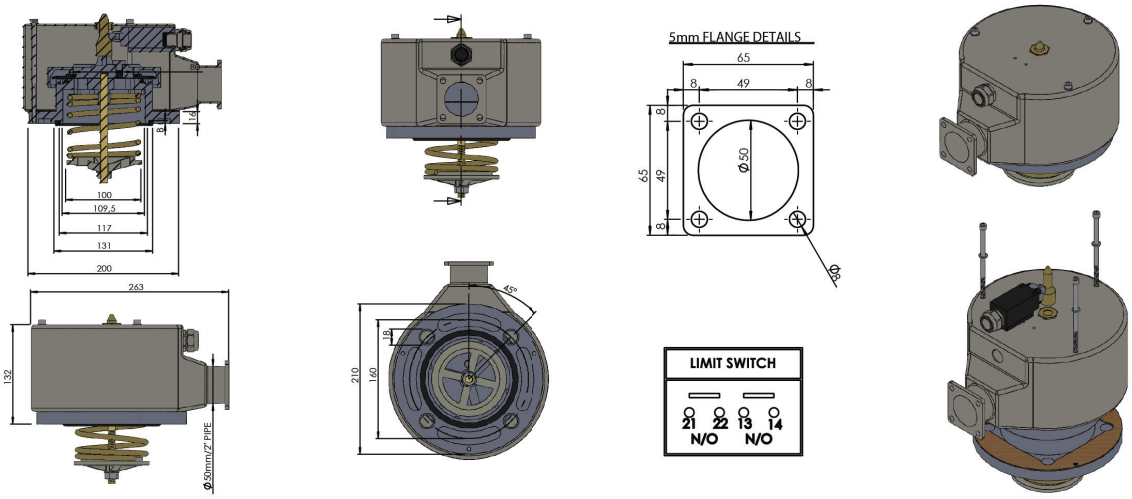

Remarks:
T50 and T80 devices can be set to the following pressures on request: 55Kpa, 90Kpa, 125Kpa

Part Number	Description	Operating Pressure	Maximum Capacity	Switch I max	Switch V max	Switch Config
021-200	T50 Pressure Relief Valve	70Kpa	3000 L	5A	500VAC	1 C / Over
021-201	T80 Pressure Relief Valve	70Kpa	9000 L	5A	500VAC	1 C / Over
021-211-70-XA	T80 Pressure Relief Valve S/Steel	70Kpa	9000 L	5A	500VAC	2 N / Open

Kpa RECOMMENDATION OF PRV (Pressure Relief Valve) BASED ON POSITION ON THE TRANSFORMER.

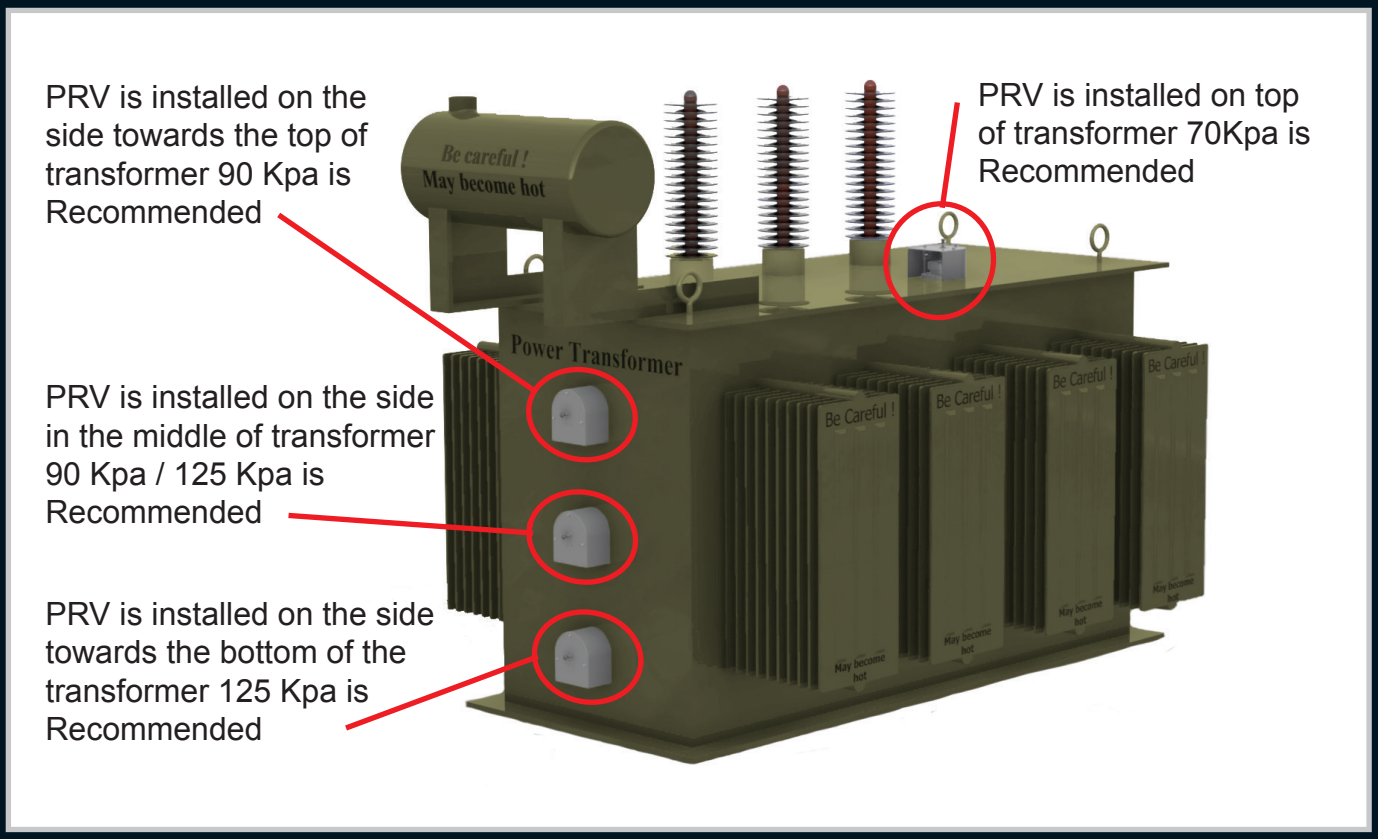

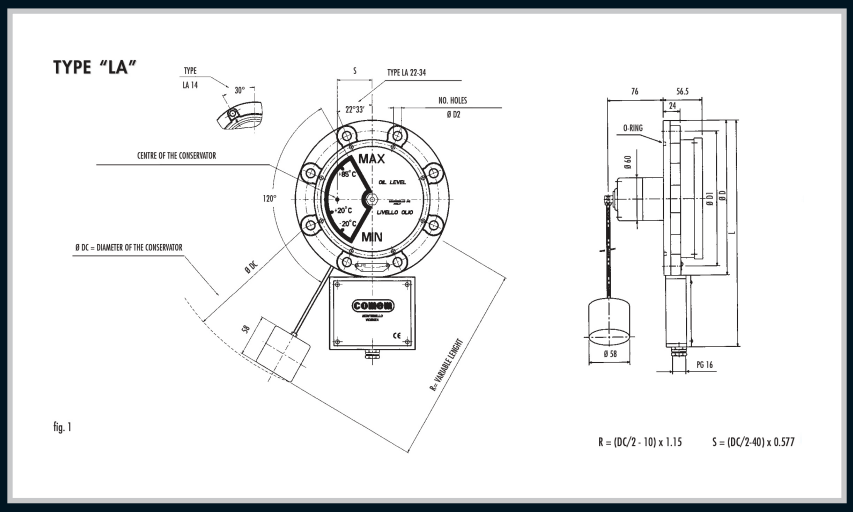

Part Number	Description	ø D	ø D1	ø D2	No. of Holes	L	O.ring Type	Weight (kg)	R Standard
021-300	LA140	140	125	7	6	245	O.R. 186 (6362)	1.4	max. 370
021-301	LA220	220	190	11.5	8	325	O.R. 221	2.3	max. 550

WHAT IS A MAGNETIC OIL GAUGE?

This is a mechanical device that sits on the conservator of a transformer and is used to measure the insulating oil level of a transformer.

HOW DOES IT WORK?

When oil expands within a transformer, due to a temperature rise, the oil level in the conservator tank will increase and visa versa when there is a fall in oil temperature. The float arm of the Magnetic Oil gauge will rise and fall with the oil level. The float arm is connected to the gearing of the gauge which in turn is magnetically connected to the display dial which is also connected with a switch. When the level drops below a set level, the switch will close and provide contacts for an alarm to be activated. This will ensure the level never drops too low without warning.

The Dial will reference the following options depending on the oil level:
- Minimum level: when the dial shows all RED
- Maximum level: when the dial shows all WHITE
- Intermediate indications between MIN & MAX: the dial shows part red and part white.

NB! * The amount of RED shown indicates, in portions , the part of the conservator left without liquid.

MICRO-SWITCH SPECIFICATION

Power supply: 24 to 220 V a.c. or d.c
Interruption power: 3A 125/250 V a.c (resistive)
0,5 A V d.c for inductive load L/R = 40ms
0,25 A 250 V d.c for inductive load L/R + 40ms

MICRO-SWITCH TESTING

Remove the cap situated in the centre of the dial on the front of the level gauge, unscrewing it in an anticlockwise direction.

Insert a screwdriver in the slot provided and turn the gauge disk until the electric circuit connected to it switches on or off.

Close the cap again, being particularly careful to position the O-ring (O.R) correctly under the cap and to screw the cap on firmly.

PARTS AND CHARACTERISTICS

• A watertight IP55 body of aluminium alloy painted RAL7001 against corrosion.
• Aluminium float rod- If the length is not specified (Distance R in drawing) , the standard size indicated on table is supplied.
• Stainless Steel external nuts and bolts.
• Operates at:
- Oil temperatures between: -25°C and +120°C
- Environment temperatures between: -25°C and +60°C

TYPE TESTS APPLIED

1. Tested for water tightness-body housing too IP55
2.Insulation Test to Earth 2.5kV AC 50 Hz for 72 seconds
3. Final assembly re-check and test.

SWITCH CONFIGURATION OPTIONS:

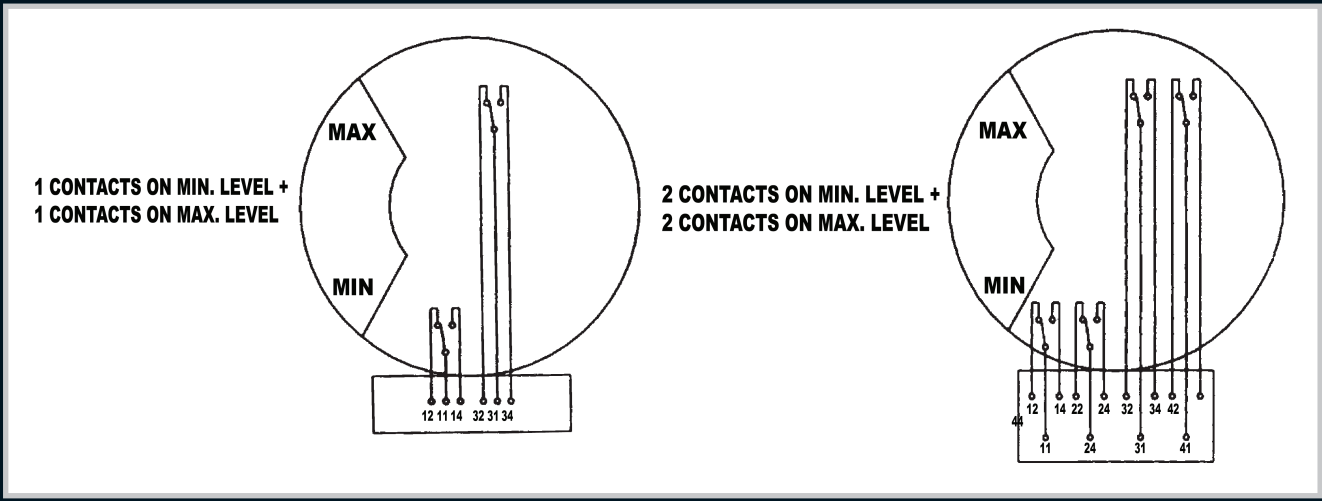

Enclosures
Hinges
Locks
Handles
Accessories
Rotary Operating Handles
Insulators
Transformer Equipment
Index

Serveron on-line DGA Monitor

- Extend Transformer life; avoid Transformer failures; Stay within Opex; Reduce lab test costs;Can be Retrofitted
- Uses Gas Chromatography for on-line assessment of Transformer Oil
- On-board Auto calibration; membrane based gas extraction sub system
- Models from 1 Gas to 8 Gas Analysis, plus moisture and temperature.
- Supporting all standard comms interfaces and protocols.
- Providing diagnostic tools for interpretation and prediction analysis
- Over 100 units installed countrywide for reference

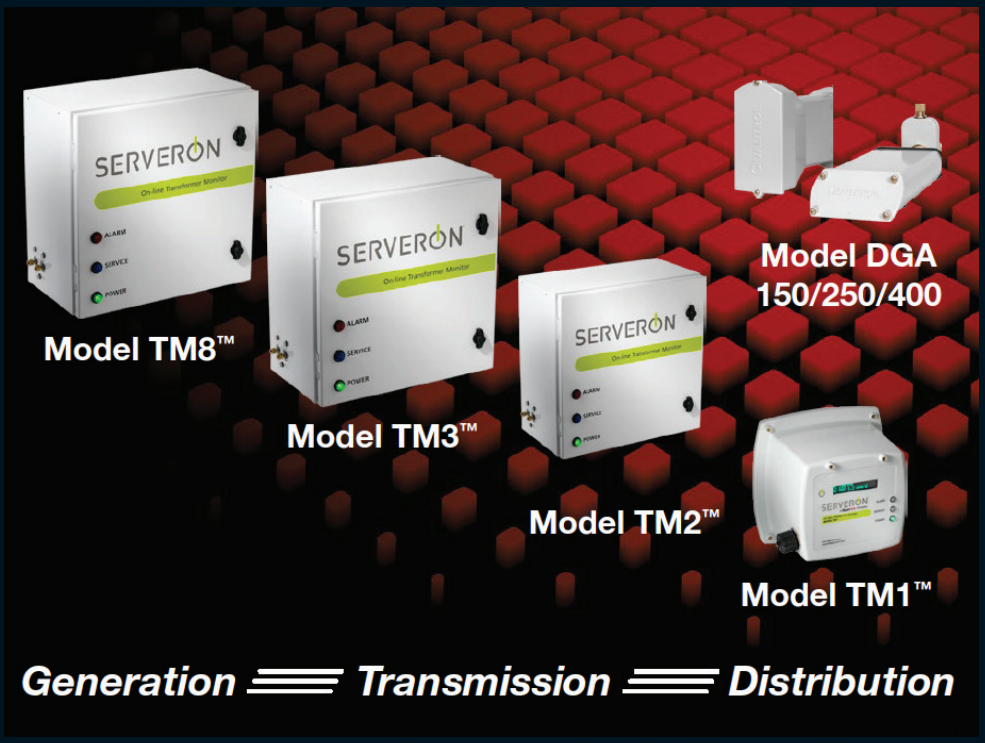

Neoptix Fibre Optic Transformer Temperature Monitoring

- For installation on new & refurbished transformers windings
- Offering Real time temperature monitoring system for Dry type and Oil filled Transformers
- Ideal for heat run tests & hot-spot measurements
- High quality GaAs Technology Fibre Optic probes utilized with multi-channel monitoring system
- Connectivity with Standard comms interfaces and protocols
- Built-in industrial relays for alarming set-up
- Remote access data view capability through iphone
- System tools for predictive analysis

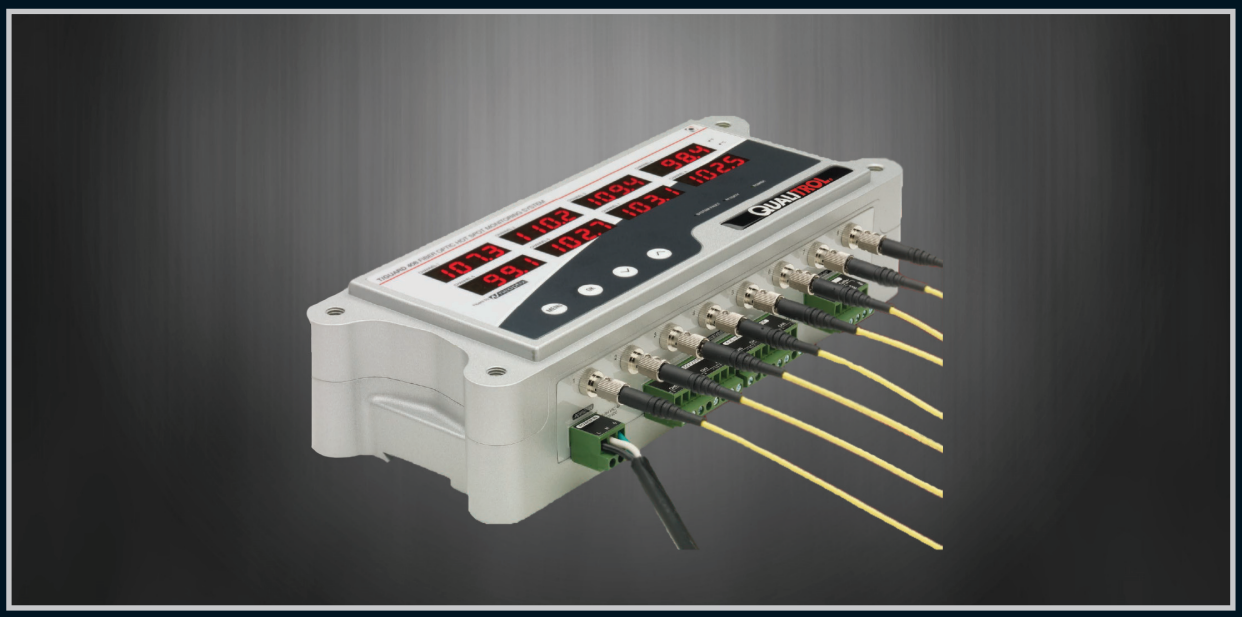

- Direct measurement inside transformer yields highly temperature readings reducing risk of failure or unnecessary reduction in transformer life.
- Over 35,000 installed worldwide.
- Long term, drift-free survivability.
- All materials are chemically and dielectrically resistant.
- ST type connectors resist failure due to vibration.
- Does not require recalibration or complex input to operate.
- Galium arsenide (GaAs) measurement principle.
- Surpasses ASTM dielectric strength standards for use inside transformers.
- Unique, patent-pending longitudinal slit enables uniform contact with transformer oil over entire probe length.

Qualitrol - QTMS Solution

ALLBRO

Reliably monitor asset health in real time

- Individual modules allow for complete QTMS customization
- Certain parameters such as dissolved gas analysis (DGA), partial discharge (PD), and 3rd party sensors can be brought in via communication ports

LOAD TAP CHANGER

- Contact wear status
- Current position and range
- Tap run time and count
- Motor current power
- Motor actuation counter
- Alarm set points
- LTC temperature and differentials

BUSHINGS

- Capacitance current value
- Capacitance alarm set points
- Tan delta value
- Tan delta alarm set points
- Temperature value
- Temperature alarm set point
- Leakage current value and set points

CONSERVATOR TANK

- Liquid level
- Buccholz relay
- Bladder rupture alarm

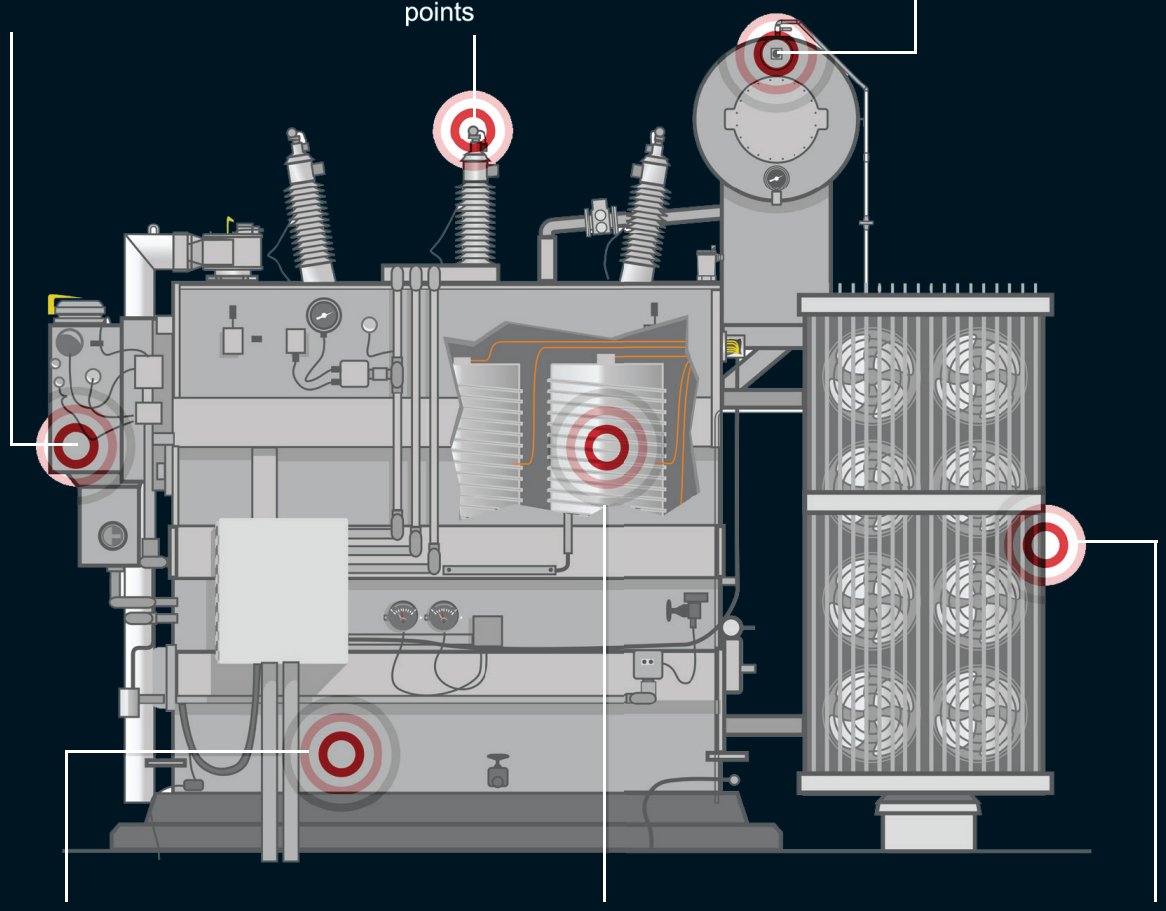

MAIN TANK

- Temperature
- Pressure relief
- Rapid pressure rise relay
- Liquid level
- Smart breather

3rd party smart sensors

WINDINGS

- Fiber optic winding temperature
- Simulated winding temperature
- Partial Discharge (PD)
- Dissolved Gas Analysis (DGA)
- Geomagnetically Induced Current (GIC)

COOLING MONITORING

- Motor current power and motor run time
- Alarm set points
- Cooling bank temperature and differentials
- Flow indicator status
- Efficiency status

QUALITROL® Defining Reliability

Qualitrol
Exclusively Distributed by Allbro in Africa

ALLBRO

AKM 44612/44622/44617/44618
Direct mount thermometers
Control and alarm with switches and optional SCADA output

OTIWTI™ Remote mount thermometer (AKM)
The next generation thermometer from the global leader

Thermometers

092 Flow Indicators
Control alarms and other auxillary equipment

Oil Flow Indicators

XPRD Extra Protection Relief Device
50% more tank protection during overpressure events

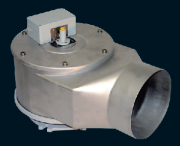

LPRD/208/213/216 Large Pressure Relief Devices
Confidence with the global standard in pressure relief devices

Pressure Relief Valves

QUALITROL
Defining Reliability

T/Guard Link Optical Hot Spot Module

CAB-699 Fiber Optic Temperature Probe

509 DW Intelligent Transformer Monitor with Direct Winding

CON-159 Optical Feedthrough

T/Guard 408 and 408XT Fiber Optic Temperature Monitoring System

COV-121/PLT-201/PLT-202 Junction Box For Tank Wall Plate

KIT-057 Portable Fiber Optic Thermometer
Compact fiber optic temperature measurement

900/910 Rapid Pressure Rise Relays
Protection and detection of dangerous sudden pressure changes

Rapid Pressure Rise Relays

Serveron Dissolved Gas Analysers

Neoptix Fibre Monitoring

Notes: