ALLBRO

3 LOCKS

CATALOGUE EDITION 5

22_1_018P
Pg.123

22_1_026P
Pg.123

22_1_026P-DB
Pg.123

22_1_12_06-20MM
Pg.124

22_1_18B/B6_18
Pg.124

22_3_18B/B6_18
Pg.125

22_1_18B/CS_22
Pg.125

22_1_18B/C8_22
Pg.126

22_1_18B/C8S_18
Pg.126

22_3_18B/SS6_18
Pg.127

22_1_18B92268
Pg.127

22_1_18B/SS6_18
Pg.128

22_1_18B/C2_18
Pg.128

22_1_18B/C8S_18
Pg.129

22_1_18B/B4D_20
Pg.129

22_1_18B/C8S_T25
Pg.130

FP_22
Pg.130

22_3_25_W/P
Pg.130

22_3_25_W/K
Pg.131

22_3_28_K/N_B
Pg.131

22_3_25_L/W
Pg.131

22_2_25_B/K
Pg.131

87_2_09_B/K
Pg.132

86_2_29_B/K
Pg.132

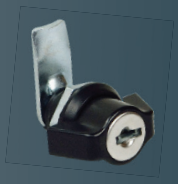
16_3_13_W/K
Pg.133

1010186
Pg.133

22_5_28_06
Pg.134

16_3_38_W/COM
Pg.134

22_1_55_6_COMP
Pg.134

90_114_201
Pg.135

86_124_30
Pg.135

72_00_130
Pg.136

71_1_85B/K
Pg.137

91_1_108C/K
Pg.137

16_1_401_01
Pg.138

16_1_012_06
Pg.138

16_3_401_01
Pg.139

222309
Pg.140

8_5_271_01N
Pg.140

25_5_201_04
Pg.141

25_65_401_01
Pg.141

1010106/16
Pg.142

221000
Pg.142

222622/20/60066
Pg.143

25_A65_270_10
Pg.143

222622/20
Pg.143

222622N/20SS
Pg.144

222628/20/SS
Pg.144

1010175
Pg.145

22_04_08_1S/S
Pg.145

16_4_432_01/MS/3H
Pg.146

16_4_432_01
Pg.147

22_4_00_08_1
Pg.147

20_7_331_01
Pg.148

T26_20
Pg.148

10111KZK190
Pg.149

104444PS/SHD &
10333PBC-HD
Pg.149

10333
Pg.151

10444
Pg.152

FNSH/HOOK
Pg.152

FNSH/65
Pg.153

50_2_23_P_B/K
Pg.153

150_2_20_B/K
Pg.154

50_4_23_B/P
Pg.154

164_1_50_N/K
Pg.154

160_1_50_BK/RLS
Pg.155

120_1_100_ZN/BK
Pg.155

46_3_39_Z/P
Pg.155

49_10_K
Pg.156

49_00_0
Pg.156

39_1_3B
Pg.156

A New Era in Swing Handles

Founded in 1978, Allbro is a South African based manufacturer of components for the electrical distribution industry. In 2001, stemming from our passion for electric enclosures, Allbro developed and began to manufacture a range of Locks and Hinges. Through cutting edge technology and innovative design, Allbro quickly established itself as a leader in this field and has continued to create and produce products which are ahead of their time.

Featured below are Allbro's all new range of Swing handles:

Quality Chrome Plated | Superior 316 Grade Stainless Steel | Standard 92268 and CL001 Barrel Types
User Friendly | Anti-tamper and Anti-Vibration System

Also Available from Allbro:
Quarter Turn Locks, Compression Latches, L and T Handles, Lever Locks, Pedestal Hinges, External Hinges, Concealed Hinges, Bullet Hinges

ALLBRO

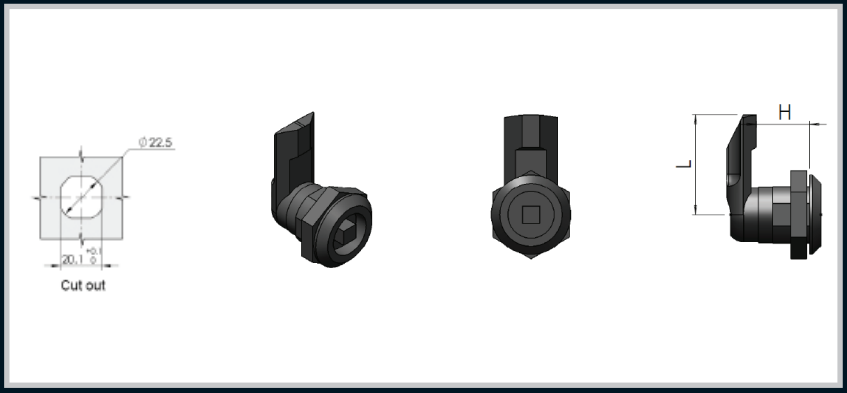

Part Number	Material	Finish	Insert Type	Insert size (mm)	H (mm)	L (mm)
22_1_018P	Polyamide	Black	Square	6	18	35
22_1_015P	Polyamide	Black	Square	6	15	40

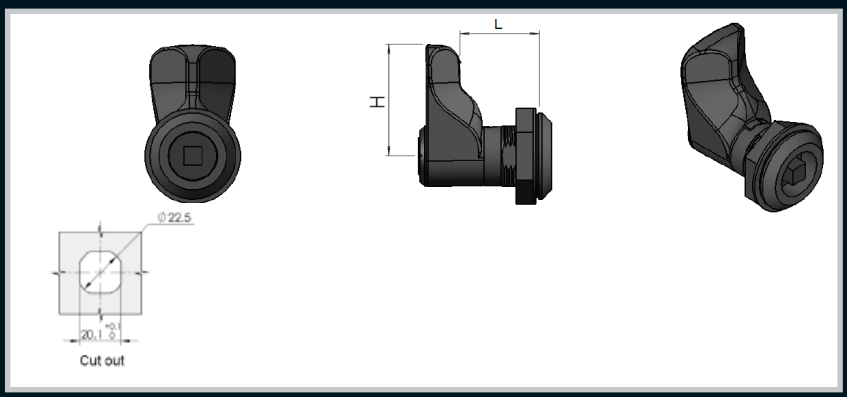

Part Number	Material	Finish	Insert Type	Insert size (mm)	H (mm)	L (mm)
22_1_026P	Polyamide	Black	Square	6	36	26

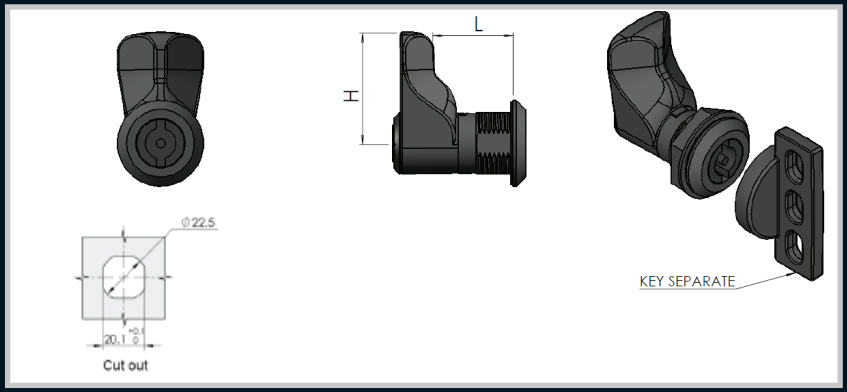

Part Number	Material	Finish	Insert Type	Insert size (mm)	H (mm)	L (mm)
22_1_026P/DB	Polyamide	Black	Double Bit	6	36	26

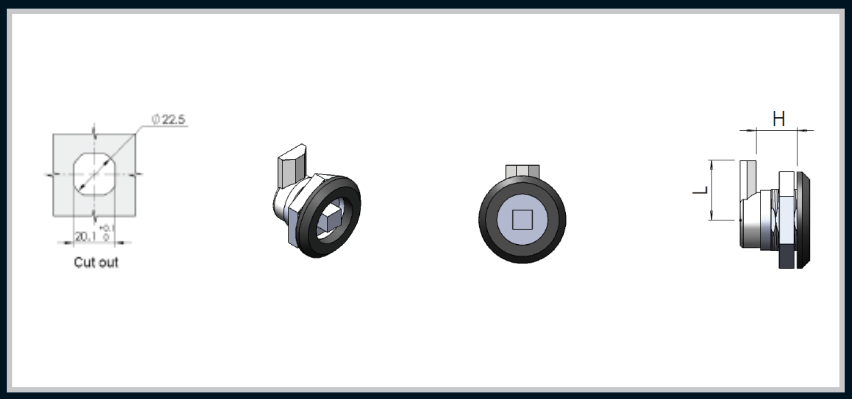

Remarks:
For drive options refer to page 157

Part Number	Material	Finish	Insert Type	Insert size (mm)	H (mm)	L (mm)
22_1_12_06	ZDC	Black Powder Coated	Square	6	12	20

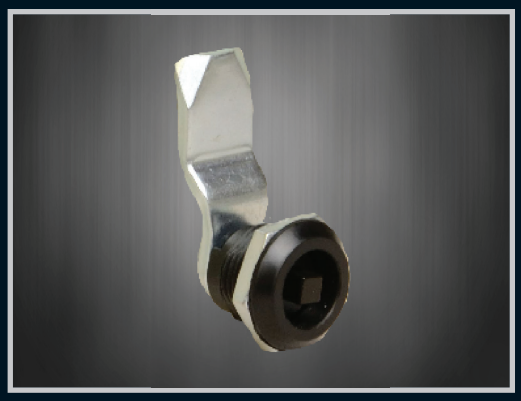

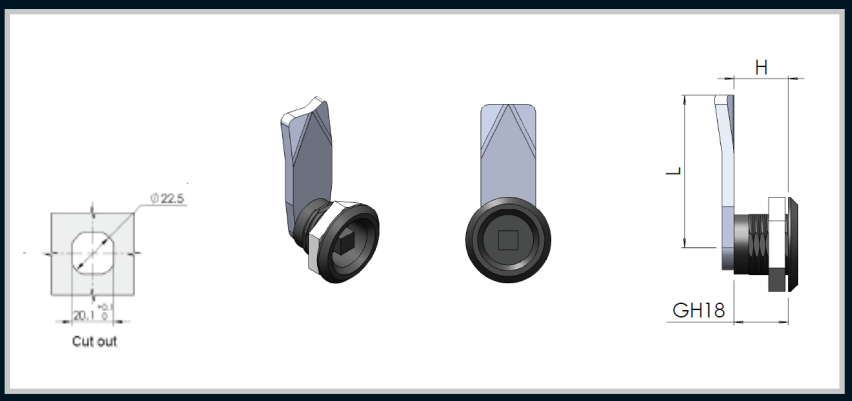

Part Number	Material	Finish	Insert Type	Insert size (mm)	H (mm)	L (mm)
22_1_18B/B6_18	ZDC	Black Powder Coated	Square	6	18	45
22_1_18B/B6_20	ZDC	Black Powder Coated	Square	6	20	45
22_1_18B/B6_22	ZDC	Black Powder Coated	Square	6	22	45
22_1_18B/B6_25	ZDC	Black Powder Coated	Square	6	25	45
22_1_18B/B6_36	ZDC	Black Powder Coated	Square	6	36	45
22_1_18B/B6_41	ZDC	Black Powder Coated	Square	6	41	45
22_1_18B/B6_47	ZDC	Black Powder Coated	Square	6	47	45
22_1_18B/B6_50	ZDC	Black Powder Coated	Square	6	50	45

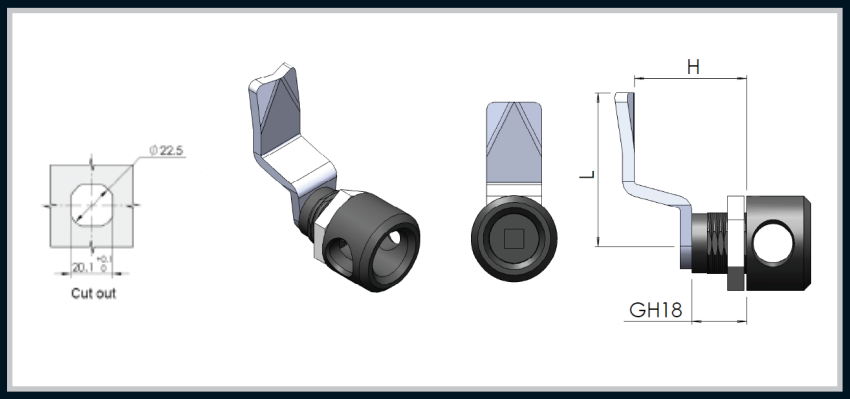

Remarks:
For drive options refer to page 157

Part Number	Material	Finish	Insert Type	Insert size (mm)	H (mm)	L (mm)
22_3_18B/B6_18	ZDC	Black Powder Coated	Square	6	18	45
22_3_18B/B6_20	ZDC	Black Powder Coated	Square	6	20	45
22_3_18B/B6_22	ZDC	Black Powder Coated	Square	6	22	45
22_3_18B/B6_25	ZDC	Black Powder Coated	Square	6	25	45
22_3_18B/B6_36	ZDC	Black Powder Coated	Square	6	36	45
22_3_18B/B6_41	ZDC	Black Powder Coated	Square	6	41	45
22_3_18B/B6_47	ZDC	Black Powder Coated	Square	6	47	45
22_3_18B/B6_50	ZDC	Black Powder Coated	Square	6	50	45

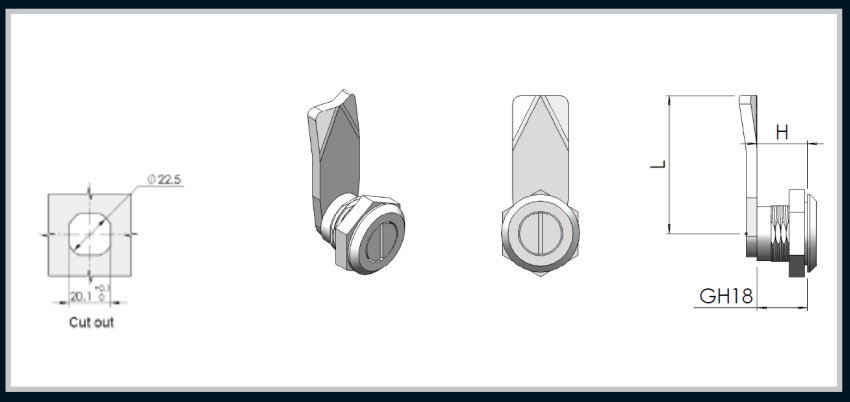

Remarks:
Available in chrome and black.
For drive options refer to page 157

Part Number	Material	Finish	Insert Type	H (mm)	L (mm)
22_1_18B/CS_18	ZDC	Chrome	Slotted	18	45
22_1_18B/CS_20	ZDC	Chrome	Slotted	20	45
22_1_18B/CS_22	ZDC	Chrome	Slotted	22	45
22_1_18B/CS_25	ZDC	Chrome	Slotted	25	45
22_1_18B/CS_36	ZDC	Chrome	Slotted	36	45
22_1_18B/CS_41	ZDC	Chrome	Slotted	41	45
22_1_18B/CS_47	ZDC	Chrome	Slotted	47	45
22_1_18B/CS_50	ZDC	Chrome	Slotted	50	45

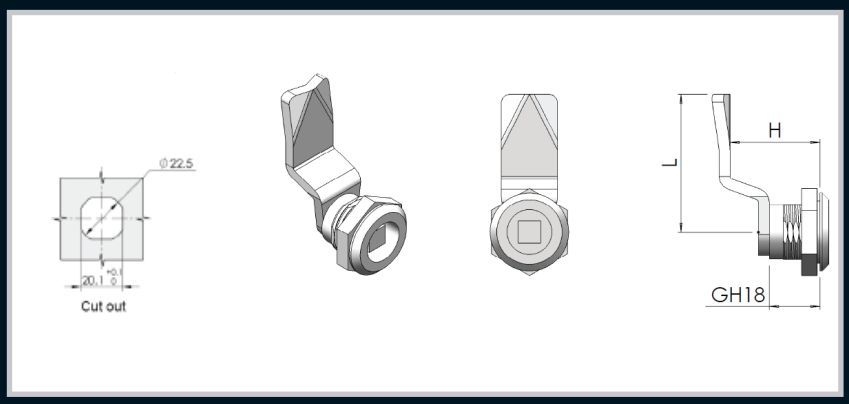

Remarks:
Available in chrome and black.
For drive options refer to page 157

Part Number	Material	Finish	Insert Type	Insert size (mm)	H (mm)	L (mm)
22_1_18B/C8_18	ZDC	Chrome	Square	6,7 or 8	18	45
22_1_18B/C8_20	ZDC	Chrome	Square	6,7 or 8	20	45
22_1_18B/C8_22	ZDC	Chrome	Square	6,7 or 8	22	45
22_1_18B/C8_25	ZDC	Chrome	Square	6,7 or 8	25	45
22_1_18B/C8_36	ZDC	Chrome	Square	6,7 or 8	36	45
22_1_18B/C8_41	ZDC	Chrome	Square	6,7 or 8	41	45
22_1_18B/C8_47	ZDC	Chrome	Square	6,7 or 8	47	45
22_1_18B/C8_50	ZDC	Chrome	Square	6,7 or 8	50	45

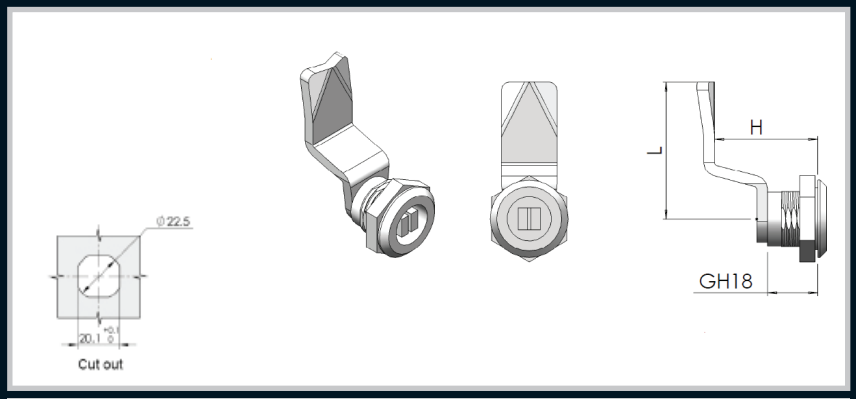

Remarks:
Quick assembly with 8mm square drive and coin slot combination.
Available in chrome and black.
For drive options refer to page 157

Part Number	Material	Finish	Insert Type	Insert size (mm)	H (mm)	L (mm)
22_1_18B/C8S_18	ZDC	Chrome	Square Slotted	8	18	45
22_1_18B/C8S_20	ZDC	Chrome	Square Slotted	8	20	45
22_1_18B/C8S_22	ZDC	Chrome	Square Slotted	8	22	45
22_1_18B/C8S_25	ZDC	Chrome	Square Slotted	8	25	45
22_1_18B/C8S_36	ZDC	Chrome	Square Slotted	8	36	45
22_1_18B/C8S_41	ZDC	Chrome	Square Slotted	8	41	45
22_1_18B/C8S_47	ZDC	Chrome	Square Slotted	8	47	45
22_1_18B/C8S_50	ZDC	Chrome	Square Slotted	8	50	45

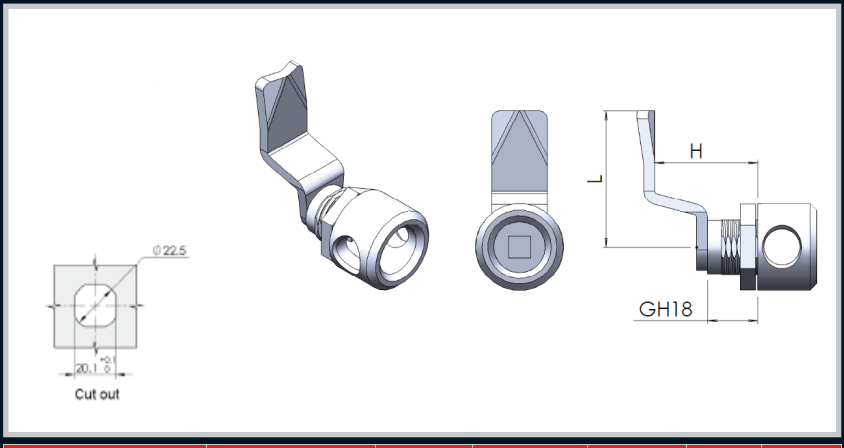

Remarks:
Quick assembly quarter turn with a 8 mm and 6mm slotted drive.
For drive options refer to page 157

Part Number	Material	Finish	Insert Type	Insert size (mm)	H (mm)	L (mm)
22_3_18B/SS6_18	Stainless Steel	Natural	Slotted	6	18	45
22_3_18B/SS6_20	Stainless Steel	Natural	Slotted	6	20	45
22_3_18B/SS6_22	Stainless Steel	Natural	Slotted	6	22	45
22_3_18B/SS6_25	Stainless Steel	Natural	Slotted	6	25	45
22_3_18B/SS6_36	Stainless Steel	Natural	Slotted	6	36	45
22_3_18B/SS6_41	Stainless Steel	Natural	Slotted	6	41	45
22_3_18B/SS6_47	Stainless Steel	Natural	Slotted	6	47	45
22_3_18B/SS6_50	Stainless Steel	Natural	Slotted	6	50	45
22_3_18B/SS8_18	Stainless Steel	Natural	Slotted	8	18	45
22_3_18B/SS8_20	Stainless Steel	Natural	Slotted	8	20	45
22_3_18B/SS8_22	Stainless Steel	Natural	Slotted	8	22	45
22_3_18B/SS8_25	Stainless Steel	Natural	Slotted	8	25	45
22_3_18B/SS8_36	Stainless Steel	Natural	Slotted	8	36	45
22_3_18B/SS8_41	Stainless Steel	Natural	Slotted	8	41	45
22_3_18B/SS8_47	Stainless Steel	Natural	Slotted	8	47	45
22_3_18B/SS8_50	Stainless Steel	Natural	Slotted	8	50	45

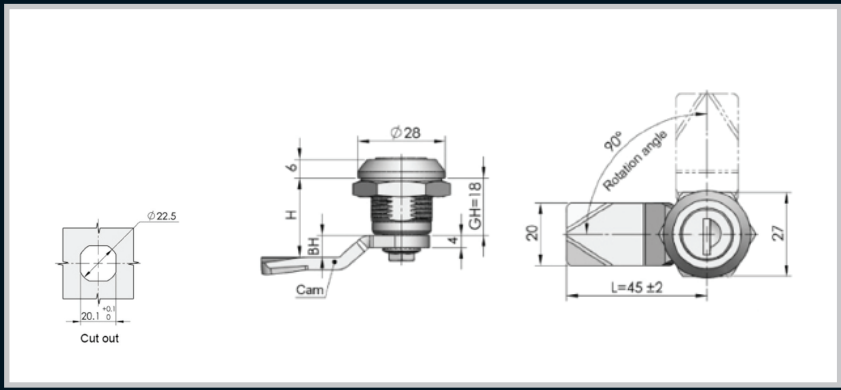

Part Number	Material	Finish	Type	H (mm)	L (mm)
22_1_18B/92268_18	ZDC	Black P/C	Keyed	18	45
22_1_18B/92268_20	ZDC	Black P/C	Keyed	20	45
22_1_18B/92268_22	ZDC	Black P/C	Keyed	22	45
22_1_18B/92268_25	ZDC	Black P/C	Keyed	25	45
22_1_18B/92268_36	ZDC	Black P/C	Keyed	36	45
22_1_18B/92268_41	ZDC	Black P/C	Keyed	41	45
22_1_18B/92268_47	ZDC	Black P/C	Keyed	47	45
22_1_18B/92268_50	ZDC	Black P/C	Keyed	50	45

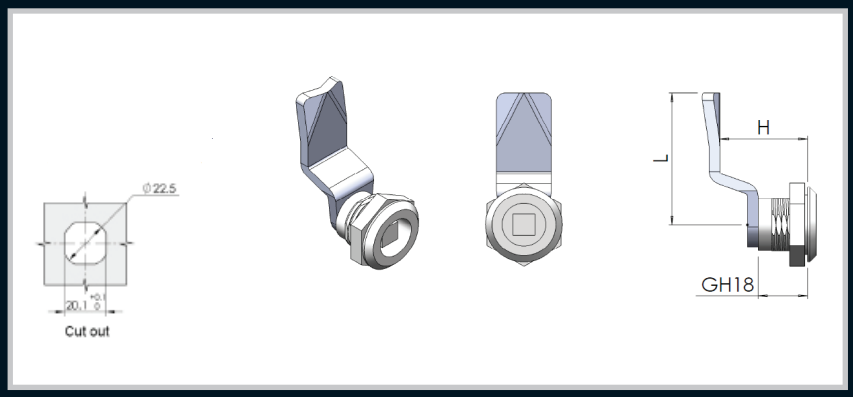

Remarks:
316 Stainless Steel
For drive options refer to page 157

Part Number	Material	Finish	Insert Type	Insert size (mm)	H (mm)	L (mm)
22_1_18B/SS6_18	Stainless Steel	Natural	6	Square	18	45
22_1_18B/SS6_20	Stainless Steel	Natural	6	Square	20	45
22_1_18B/SS6_22	Stainless Steel	Natural	6	Square	22	45
22_1_18B/SS6_25	Stainless Steel	Natural	6	Square	25	45
22_1_18B/SS6_36	Stainless Steel	Natural	6	Square	36	45
22_1_18B/SS6_41	Stainless Steel	Natural	6	Square	41	45
22_1_18B/SS6_47	Stainless Steel	Natural	6	Square	47	45
22_1_18B/SS6_50	Stainless Steel	Natural	6	Square	50	45
22_1_18B/SS8_18	Stainless Steel	Natural	8	Square	18	45
22_1_18B/SS8_20	Stainless Steel	Natural	8	Square	20	45
22_1_18B/SS8_22	Stainless Steel	Natural	8	Square	22	45
22_1_18B/SS8_25	Stainless Steel	Natural	8	Square	25	45
22_1_18B/SS8_36	Stainless Steel	Natural	8	Square	36	45
22_1_18B/SS8_41	Stainless Steel	Natural	8	Square	41	45
22_1_18B/SS8_47	Stainless Steel	Natural	8	Square	47	45
22_1_18B/SS8_50	Stainless Steel	Natural	8	Square	50	45

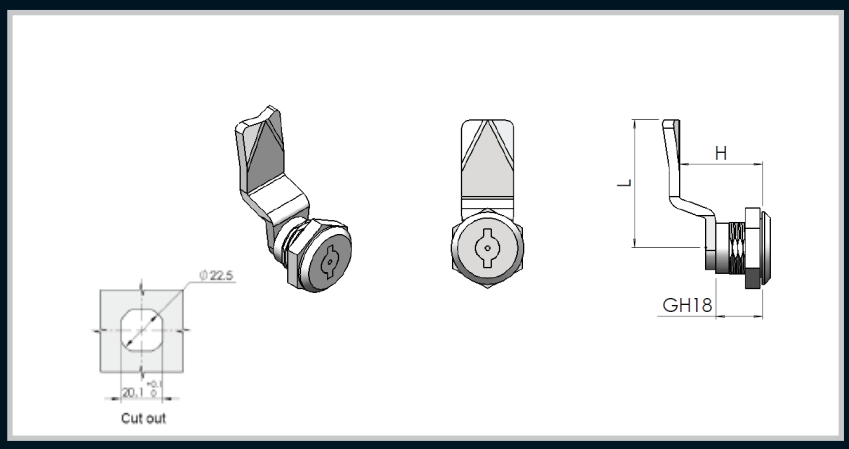

Remarks:
Spring Loaded Quarter Turn Lock IP 65

Part Number	Material	Finish	Insert Type	Insert size (mm)	H (mm)	L (mm)
22_1_18B/C2_18	Chrome	Natural	Double Bit	6	18	45
22_1_18B/C2_20	Chrome	Natural	Double Bit	6	20	45
22_1_18B/C2_25	Chrome	Natural	Double Bit	6	25	45
22_1_18B/C2_30	Chrome	Natural	Double Bit	6	30	45

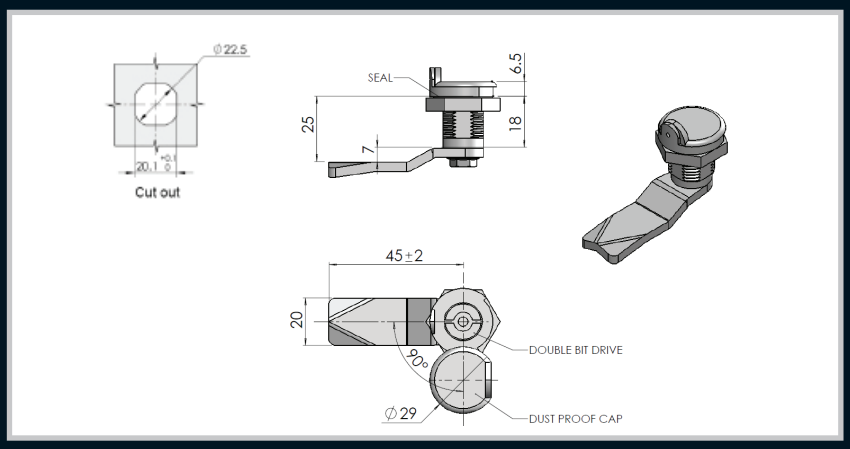

Part Number	Material	Finish	Insert Type	Insert size (mm)
22_6_18B/C8S_18	Chrome	Natural	Double Bit	8
22_6_18B/C8S_20	Chrome	Natural	Double Bit	8
22_6_18B/C8S_22	Chrome	Natural	Double Bit	8
22_6_18B/C8S_25	Chrome	Natural	Double Bit	8
22_6_18B/C8S_36	Chrome	Natural	Double Bit	8
22_6_18B/C8S_41	Chrome	Natural	Double Bit	8
22_6_18B/C8S_47	Chrome	Natural	Double Bit	8
22_6_18B/C8S_50	Chrome	Natural	Double Bit	8

Remarks:
Pad-lockable version also available.
Please refer to page 157 for more drive options.

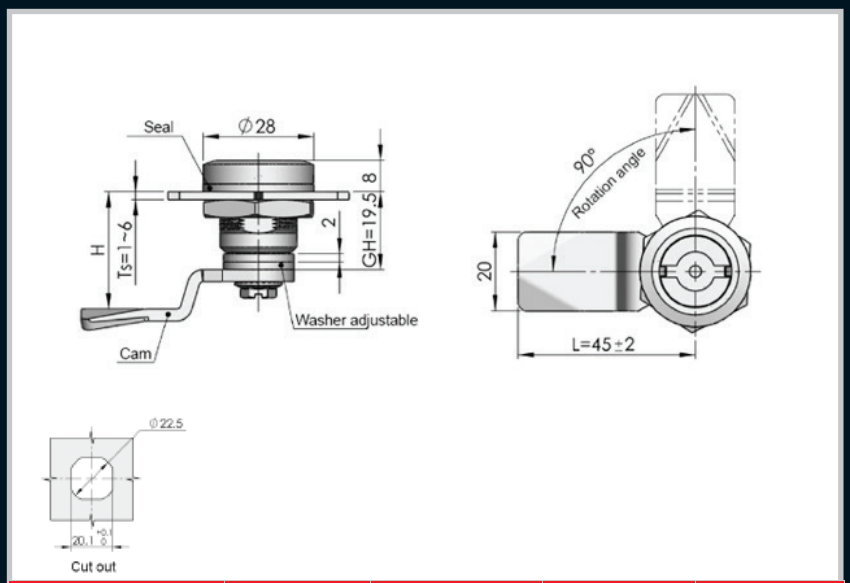

Part Number	Material	Finish	Insert Type	Insert size (mm)
22_1_18B/B4D_20	ZDC	Black P/C	Double Bit	4
22_1_18B/B4D_25	ZDC	Black P/C	Double Bit	4
22_1_18B/B4D_36	ZDC	Black P/C	Double Bit	4
22_1_18B/B4D_41	ZDC	Black P/C	Double Bit	4

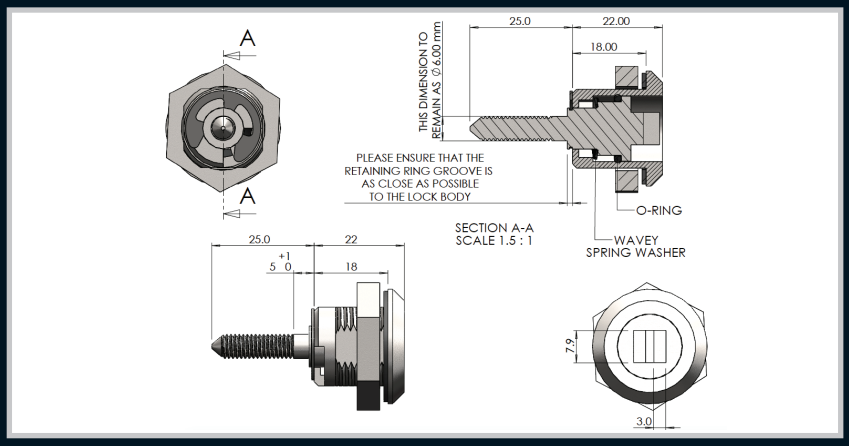

Part Number	Material	Finish	Insert Type	Insert size (mm)
22_1_18B/C8S_T25	ZDC	Chrome Plated	Square Slotted	8
22_1_18B/C8S_T36	ZDC	Chrome Plated	Square Slotted	8

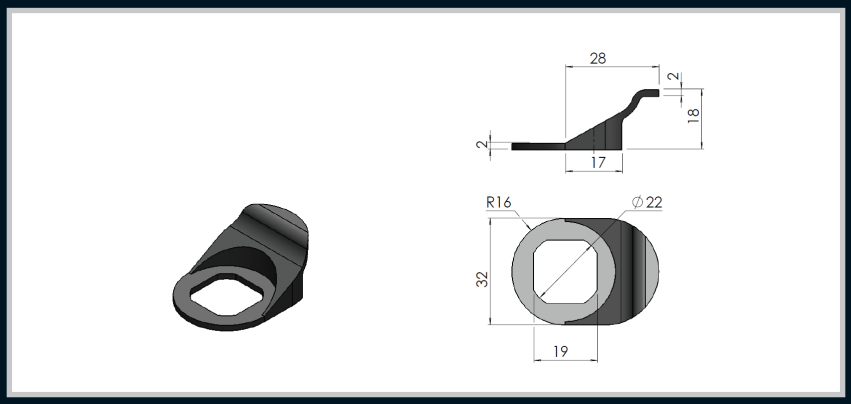

Part Number	Description
FP_22	PA Finger pull to suite 22 series locks and compression latches

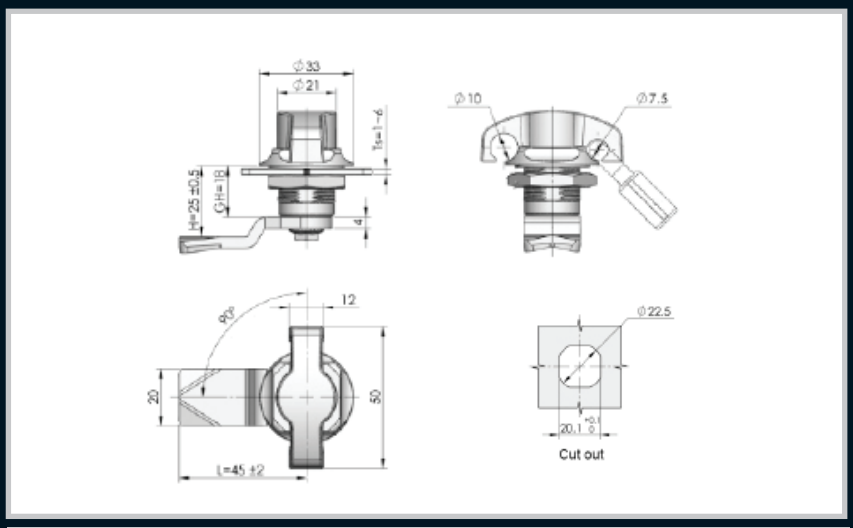

Part Number	Description
22_3_25W/P	Padlockable wing knob

Wing Knob

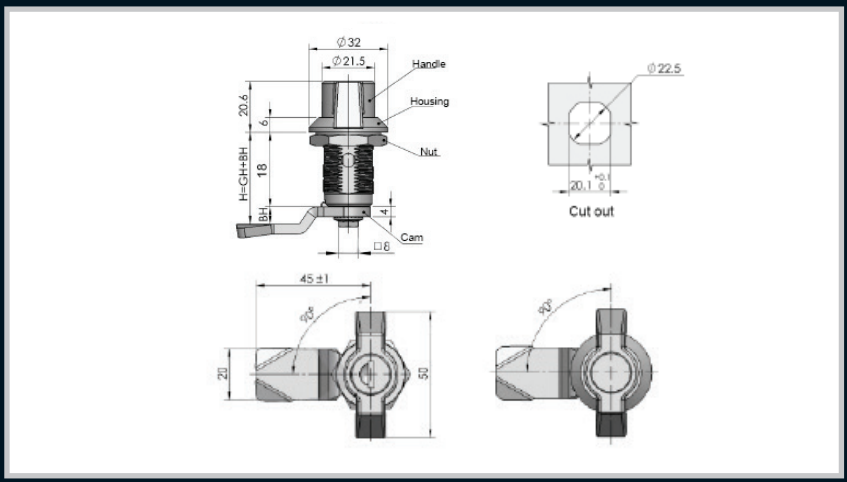

Part Number	Description
22_3_25_W/K	Key Lockable wing knob

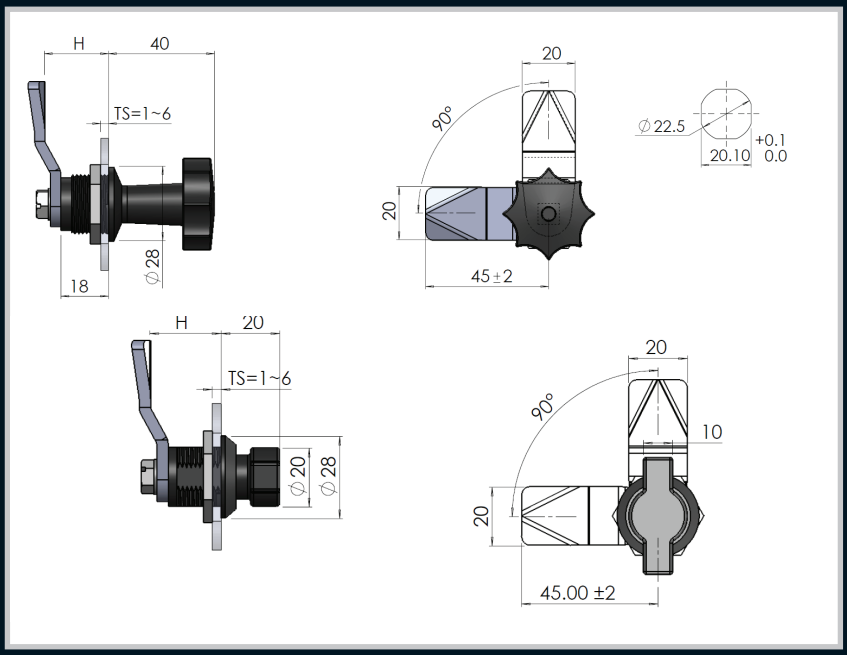

Part Number	Description
22_3_28_K/N_B	Knob handle
22_3_25_L/W	Quarter turn wing knob , Large

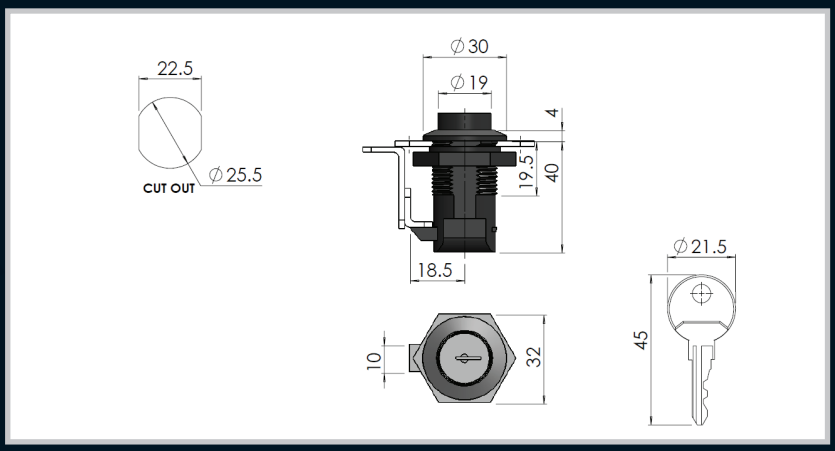

Part Number	Description
22_2_25B/K	Push Button Latch Lockable

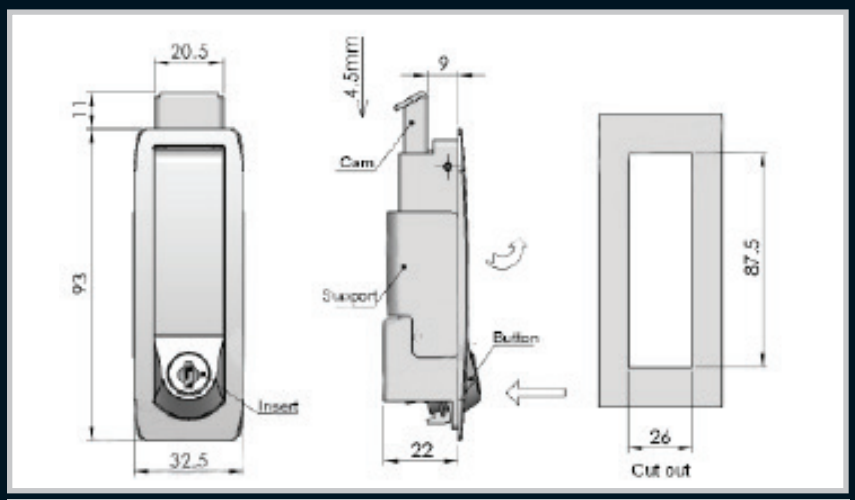

Part Number	Description
87_2_09B/K	Key lockable push button handle. Sand blast black

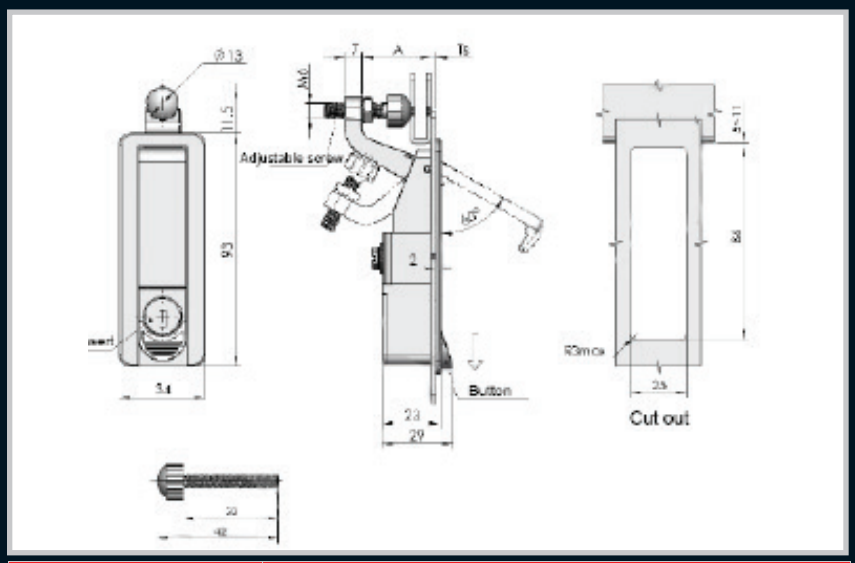

Part Number	Description
86_2_29B/K	Key lockable push handle with adjustable depth, black powder coated

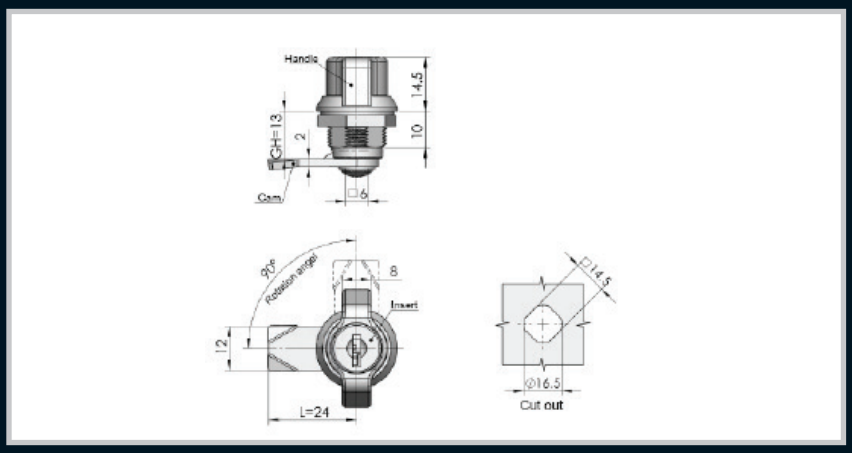

Part Number	Description
16_3_13W/K	Key Lockable wing knob

Remarks:
Quick release flush lever lock.

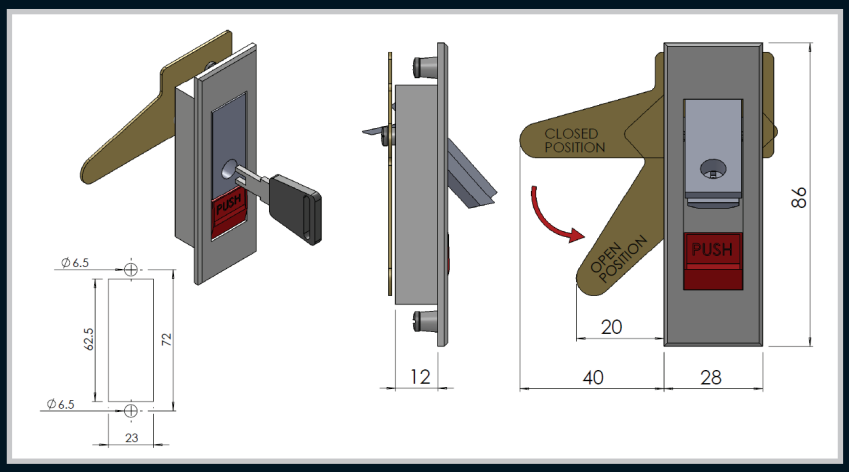

Part Number	Description
1010186	ZDC housing and insert PA button and MS cam.

Remarks:
Compression latch with 6mm compression and adjustable grip range.
Available in key lockable and non-lockable.

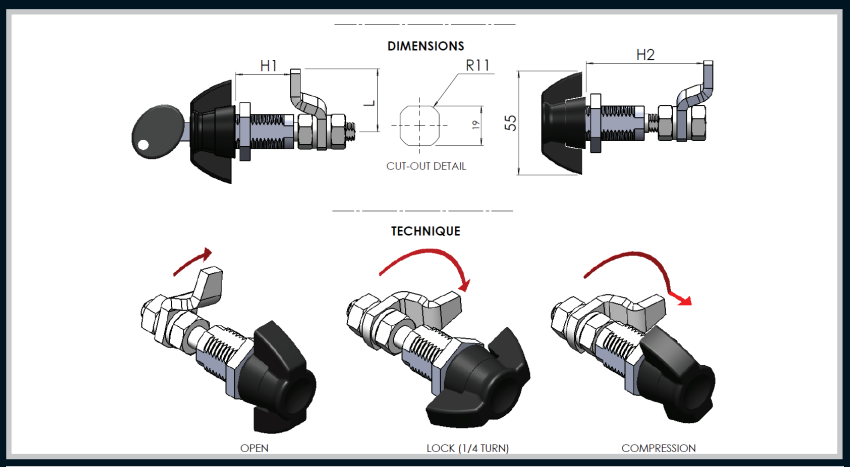

Part Number	Description	H1 (mm)	H2 (mm)	L (mm)
22_5_28_06	ZDC Black powder coated wing knob, ZDC body and MS cam	30	65	33
22_5_28_06K (LOCKABLE)	ZDC Black powder coated wing knob, ZDC body and MS cam	30	65	33

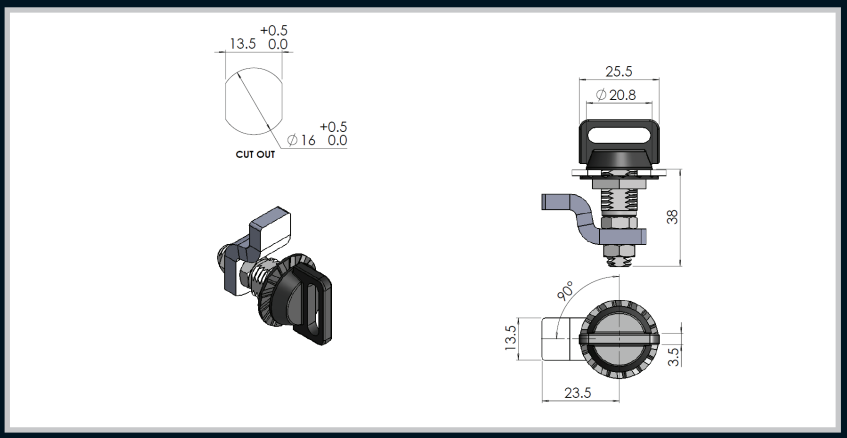

Part Number	Description
16_3_38_W/COM	Wing knob compression latch

Remarks:
For drive options refer to page 157

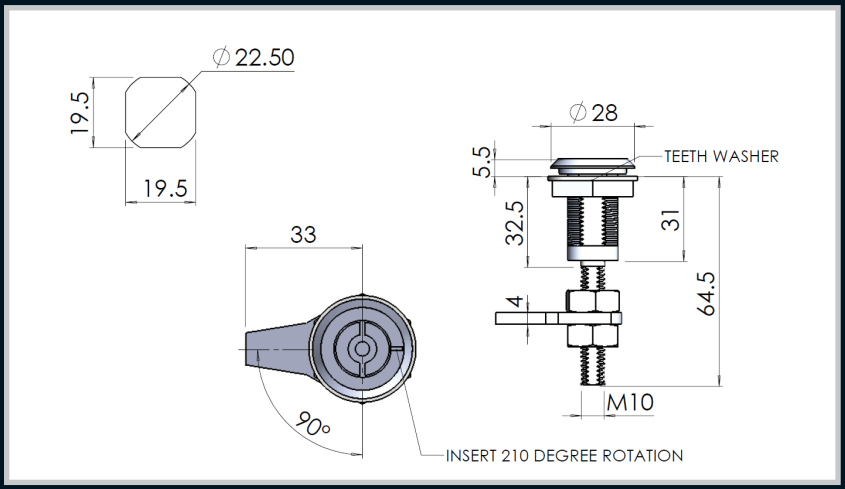

Part Number	Material	Finish	Insert Type	Insert size (mm)
22_1_55_6_COMP	ZDC	Black powder coated	Square	6
22_1_55_4_COMP	ZDC	Black powder coated	Double Bit	4
22_1_55_8_COMP	ZDC	Black powder coated	Square	8
22_1_55_8T_COMP	ZDC	Black powder coated	Triangular	8
22_1_55_S_COMP	ZDC	Black powder coated	Slotted	-

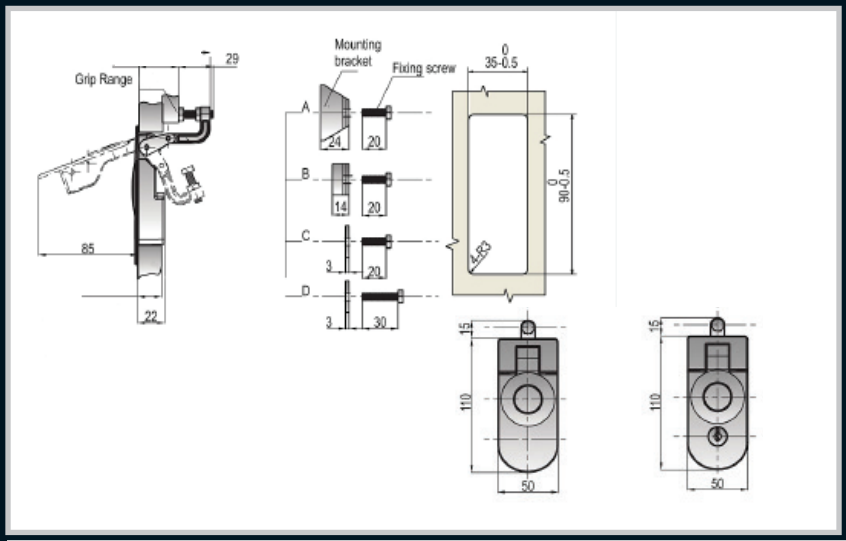

Part Number	Description	Panel Thickness	Grip Range	Mounting Bracket
		min-max (mm)	min-max (mm)	
90_114_201	Non locking	1-11	1-14	A
90_214_201	Key locking	1-11	1-14	A
90_114_202	Non locking	11-21	1-14	B
90_214_202	Key locking	11-21	1-14	B

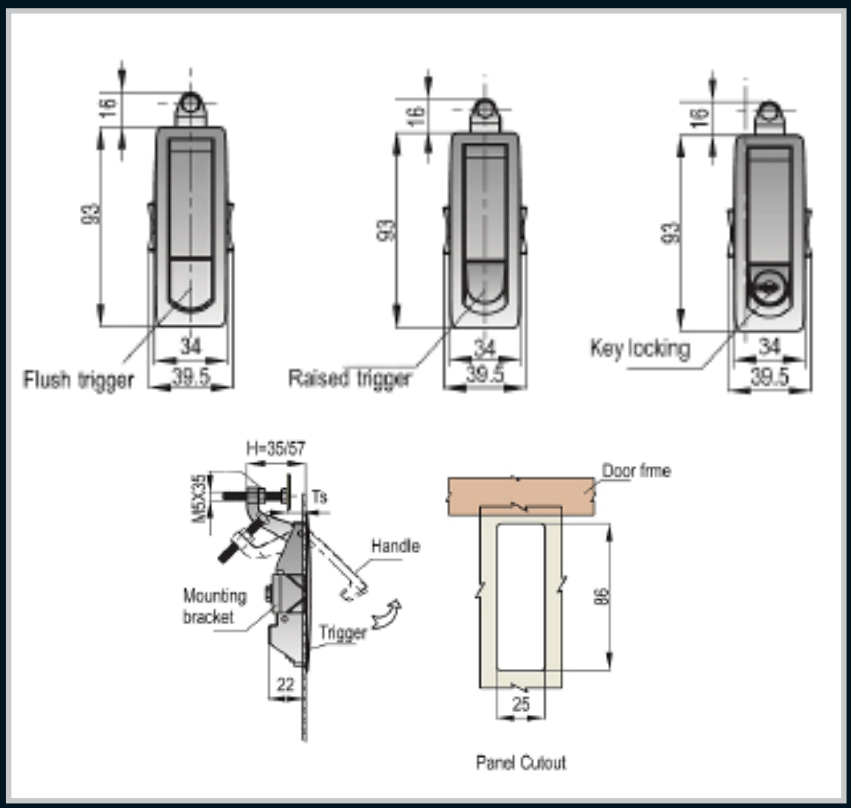

Remarks:
Available in short and long cam option.

Part Number		Trigger Style
Chrome	Black Powder Coated	
86_124_30	86_124_10	Non locking raised trigger
86_224_30	86_224_10	Non locking flush trigger
86_324_30	86_324_10	Key locking
86_424_30	86_424_10	Key locking
86_524_30	86_524_10	Tooling secured

Enclosures
Hinges
Locks
Handles
Accessories
Rotary Operating Handles
Insulators
Transformer Equipment
Index

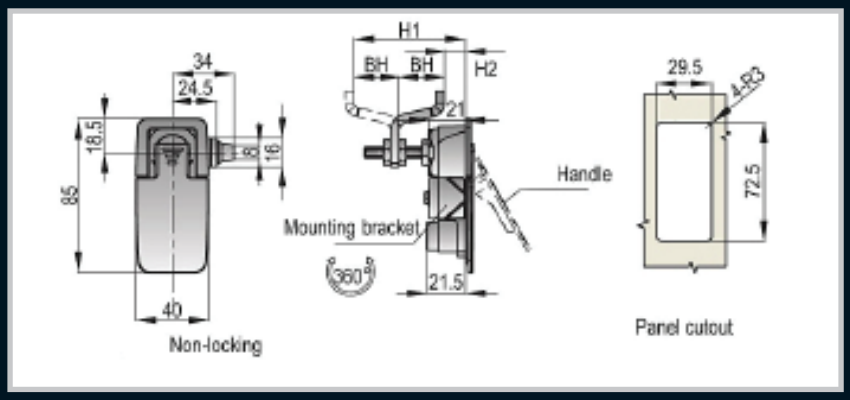

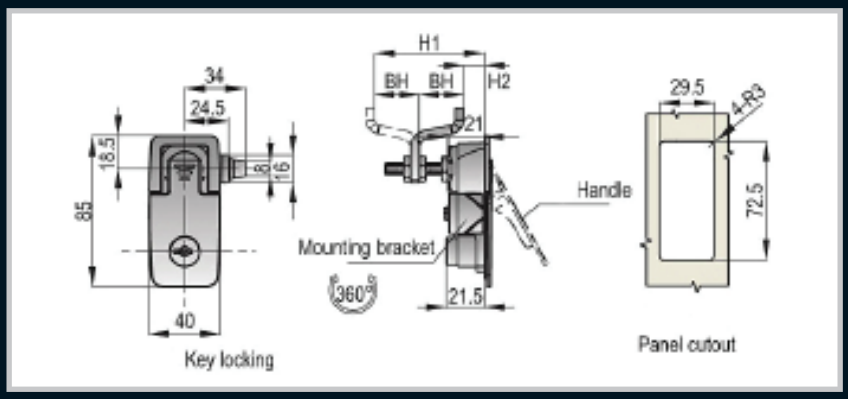

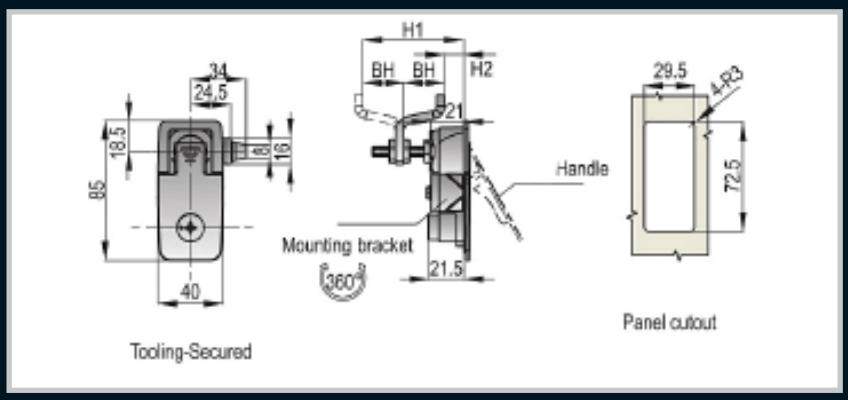

Part Number		Cylinder Style	Cam Reversed	Cam Forward
Chrome	Black Powder Coated		min - max (mm)	min - max (mm)
72_00_130	72_00_110	Non-locking	56 - 66	6-16
72_00_230	72_00_210	Non-locking	46 - 56	16 - 26
72_00_330	72_00_310	Non-locking	36 - 46	26 - 36
72_10_130	72_10_110	Key lockable	56 - 66	6 -16
72_10_230	72_10_210	Key lockable	46 - 56	6 - 16
72_10_330	72_10_310	Key lockable	36 - 46	26 - 36
72_11_130	72_11_110	Tooling Secured	56 - 66	6 - 16
72_11_230	72_11_210	Tooling Secured	46 - 56	16 - 26
72_11_330	72_11_310	Tooling Secured	36 - 46	26 - 36

Remarks:
Quick release flush compression lock.
Available in Chrome or Black.

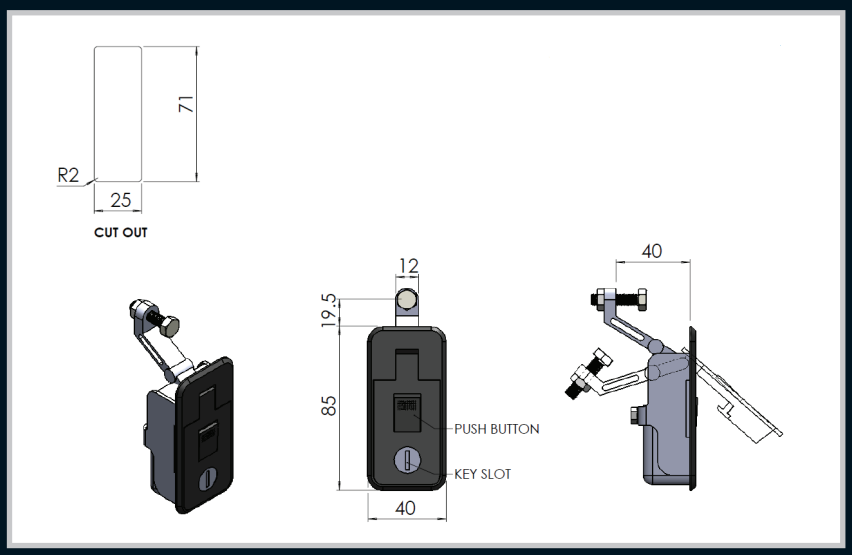

Part Number	Description
71_1_85C/K	Chrome plated ZDC
71_1_85B/K	Black Powder Coated ZDC

Remarks:
Quick release flush compression lock.
Available in Chrome or Black.

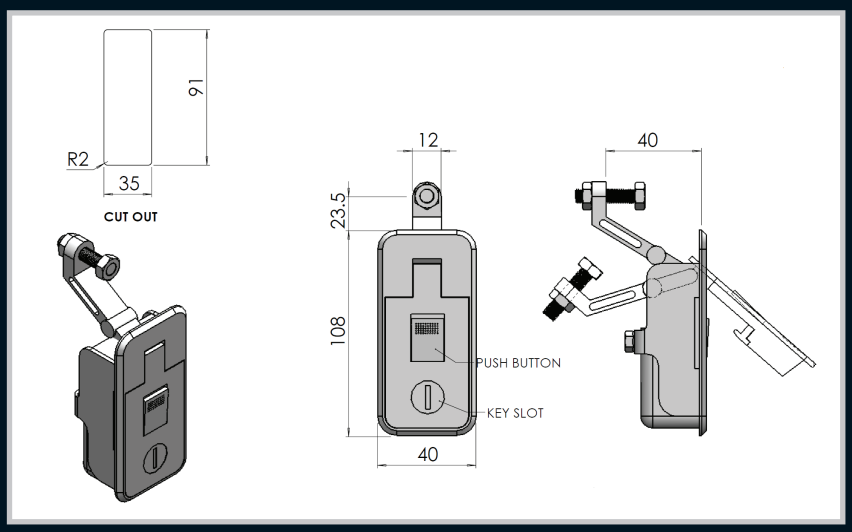

Part Number	Description
91_1_108C/K	Chrome plated ZDC
91_1_108B/K	Black Powder Coated ZDC

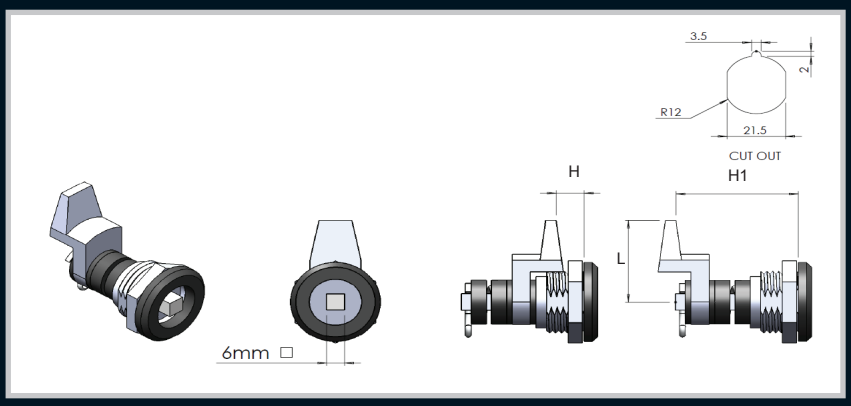

Remarks:
Please refer to page 159 for the selection of the interchangeable cams.

Part Number	Material	Finish	Insert Type	Insert size (mm)	H (mm)	H1 (mm)	L (mm)
16_1_401_01	ZDC	Black Powder Coated	Square	6	21	29	30
16_1_531_01	ZDC	Black Powder Coated	Square	6	21	41	30
16_1_401_04n/z	ZDC	Black Powder Coated	Square	6	10	42	34
16_1_531_04n/z	ZDC	Black Powder Coated	Square	6	10	53	34
16_1_401_05n/z	ZDC	Black Powder Coated	Square	6	10	42	48
16_1_531_05n/z	ZDC	Black Powder Coated	Square	6	10	53	48
16_1_401_06	ZDC	Black Powder Coated	Square	6	17	35	49
16_1_531_06	ZDC	Black Powder Coated	Square	6	17	47	49
16_1_401_08	ZDC	Black Powder Coated	Square	6	17	35	49
16_1_531_08	ZDC	Black Powder Coated	Square	6	17	47	49
16_1_401_09n/z	ZDC	Black Powder Coated	Square	6	22	32	37
16_1_531_09n/z	ZDC	Black Powder Coated	Square	6	22	44	37

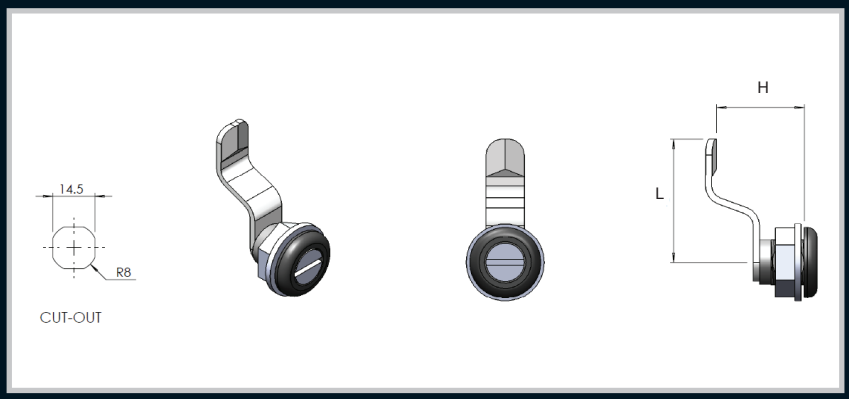

Part Number	Material	Finish	Insert Type	H (mm)	L (mm)
16_1_012_06	ZDC	Black powder coated	Coin Slot	12	30
16_1_017_06	ZDC	Black powder coated	Coin Slot	17	30
16_1_028_06	ZDC	Black powder coated	Coin Slot	28	30

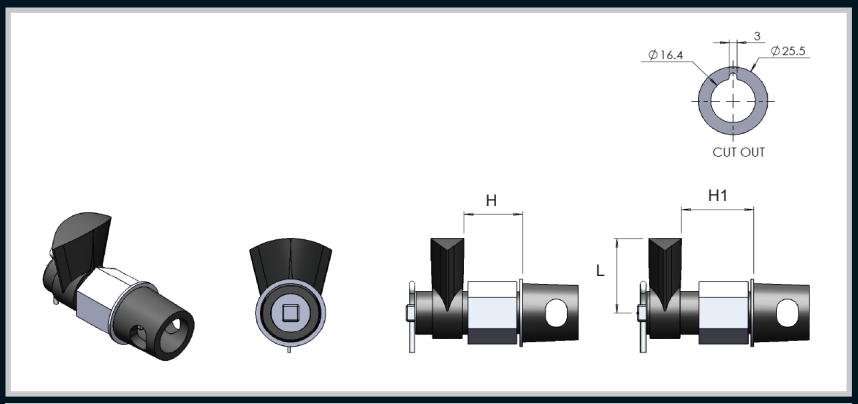

Remarks:
Please refer to page 159 for the selection of the interchangeable cams.

Part Number	Material	Finish	Insert Type	Insert size (mm)	H (mm)	H1 (mm)	L (mm)
16_3_401_01	ZDC	Black Powder Coated	Square	6	21	29	30
16_3_531_01	ZDC	Black Powder Coated	Square	6	21	41	30
16_3_401_04n/z	ZDC	Black Powder Coated	Square	6	10	42	34
16_3_531_04n/z	ZDC	Black Powder Coated	Square	6	10	53	34
16_3_401_05n/z	ZDC	Black Powder Coated	Square	6	10	42	48
16_3_531_05n/z	ZDC	Black Powder Coated	Square	6	10	53	48
16_3_401_06	ZDC	Black Powder Coated	Square	6	17	35	49
16_3_531_06	ZDC	Black Powder Coated	Square	6	17	47	49
16_3_401_08	ZDC	Black Powder Coated	Square	6	17	35	49
16_3_531_08	ZDC	Black Powder Coated	Square	6	17	47	49
16_3_401_09n/z	ZDC	Black Powder Coated	Square	6	22	32	37
16_3_531_09n/z	ZDC	Black Powder Coated	Square	6	22	44	37

Enclosures
Hinges
Locks
Handles
Accessories
Rotary Operating Handles
Insulators
Transformer Equipment
Index

Spring Loaded Locks

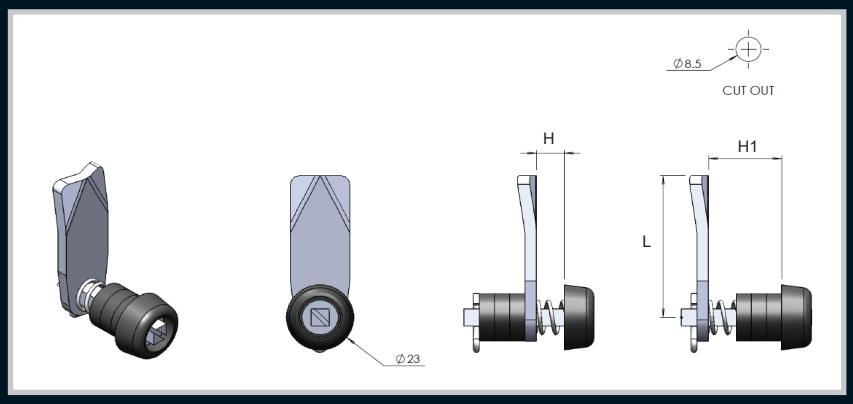

Remarks:
Spring loaded latch with adjustable depths.

Part Number	Material	Insert Type	Insert size (mm)	H (mm)	H1 (mm)	L (mm)
222309	Polyamide body, Mild steel shaft and cam	Square	6	8	25	34

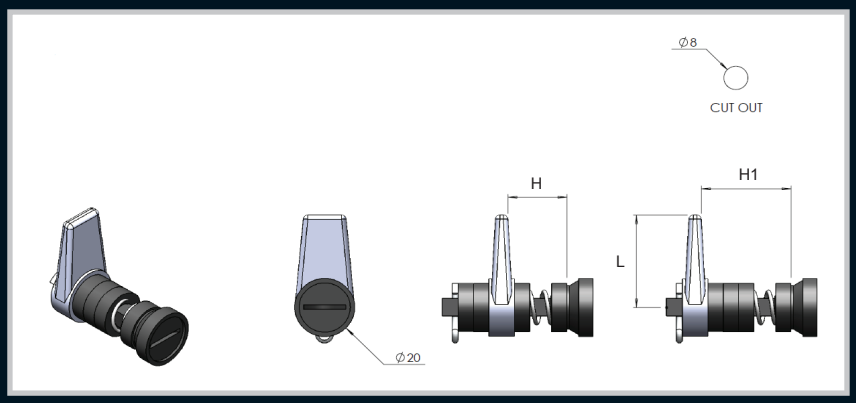

Remarks:
Spring loaded coin lock with adjustable depths.

Part Number	Material	Insert Type	Insert size (mm)	H (mm)	H1 (mm)	L (mm)
8_5_271_01N	Polyamide body, Mild steel shaft and cam	Coin Slot	8	5	13	30
8_5_371_01N	Polyamide body, Mild steel shaft and cam	Coin Slot	8	5	23	30
8_5_271_04Z/N	Polyamide body, Mild steel shaft and cam	Coin Slot	8	1.5	27	34
8_5_371_04Z/N	Polyamide body, Mild steel shaft and cam	Coin Slot	8	1.5	37	34
8_5_271_05Z/N	Polyamide body, Mild steel shaft and cam	Coin Slot	8	1.5	27	48
8_5_371_05Z/N	Polyamide body, Mild steel shaft and cam	Coin Slot	8	1.5	37	48
8_5_271_06	Polyamide body, Mild steel shaft and cam	Coin Slot	8	4	28	49
8_5_371_06	Polyamide body, Mild steel shaft and cam	Coin Slot	8	4	38	49
8_5_271_09Z/N	Polyamide body, Mild steel shaft and cam	Coin Slot	8	5	16	37
8_5_371_09Z/N	Polyamide body, Mild steel shaft and cam	Coin Slot	8	5	26	37

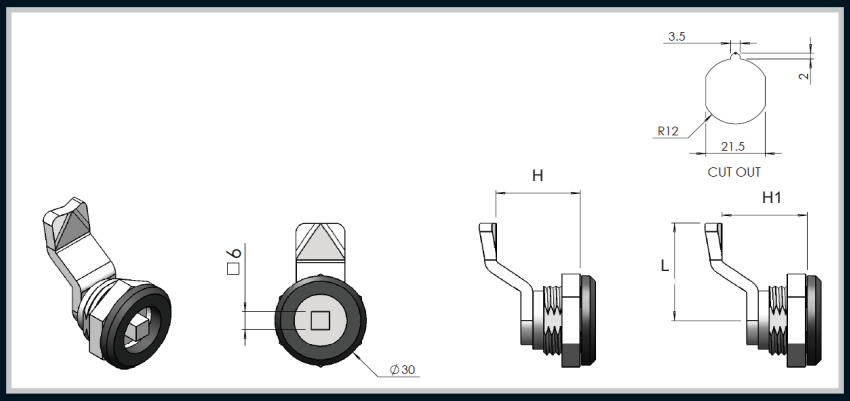

Part Number	Material	Insert Type	Insert size (mm)	H (mm)	L (mm)
25_5_201_04	ZDC body, Mild steel cam	Square	6	20	31
25_5_251_04	ZDC body, Mild steel cam	Square	6	25	31
25_5_281_04	ZDC body, Mild steel cam	Square	6	28	31

Remarks:
Please refer to page 159 for the selection of the interchangeable cams.

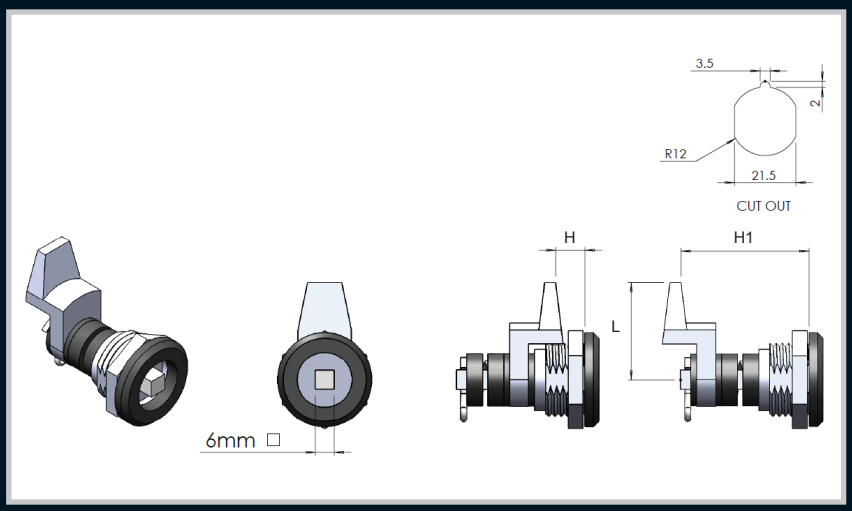

Part Number	Material	Finish	Insert Type	Insert size (mm)	H (mm)	H1 (mm)	L (mm)
25_65_401_01	ZDC	Black powder coated	Square	6	16	25	30
25_65_401_04n/z	ZDC	Black powder coated	Square	6	9	41	34
25_65_401_05n/z	ZDC	Black powder coated	Square	6	9	41	48
25_65_401_06	ZDC	Black powder coated	Square	6	13	31	49
25_65_401_08	ZDC	Black powder coated	Square	6	13	31	49
25_65_401_09n/z	ZDC	Black powder coated	Square	6	17	28	37

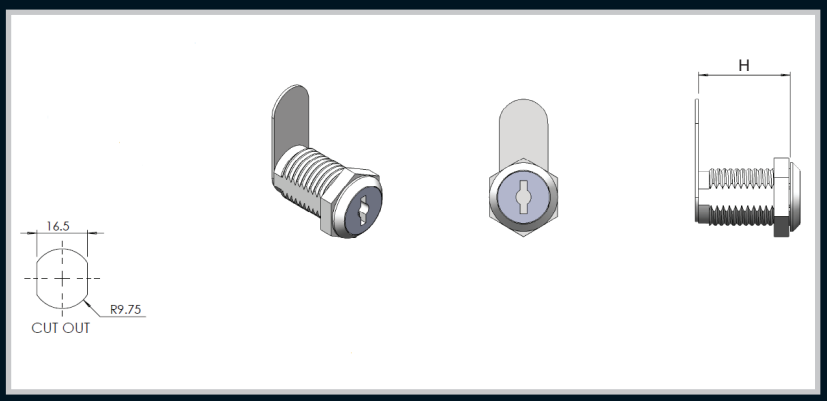

Remarks:
Cam lock available in key different and key alike.

Part Number	Material	Insert Type	Insert size (mm)	H (mm)
SAME KEY				
1010106/16/SK	ZDC	Slotted	-	16
1010106/20/SK	ZDC	Slotted	-	20
1010106/25/SK	ZDC	Slotted	-	25
DIFFERENT KEY				
1010106/16/DK	ZDC	Slotted	-	16
1010106/20/DK	ZDC	Slotted	-	20
1010106/25/DK	ZDC	Slotted	-	25

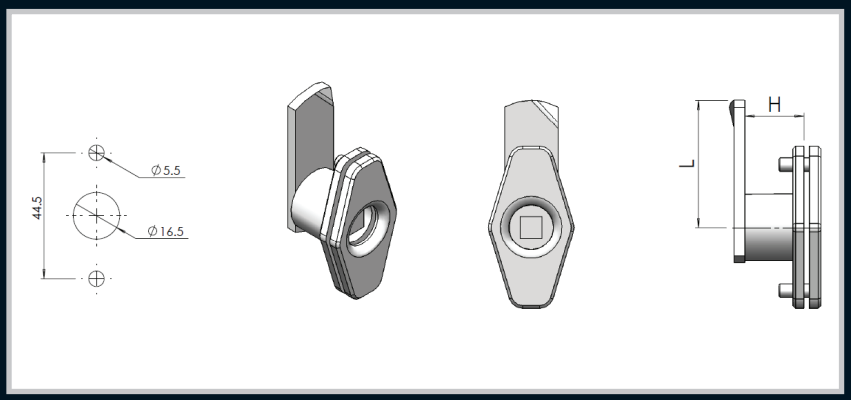

Remarks:
Municipal meter box lock.

Part Number	Material	Finish	Insert Type	Insert size (mm)	H (mm)	L (mm)
221000	Mild Steel	Natural	Square	8	22	45

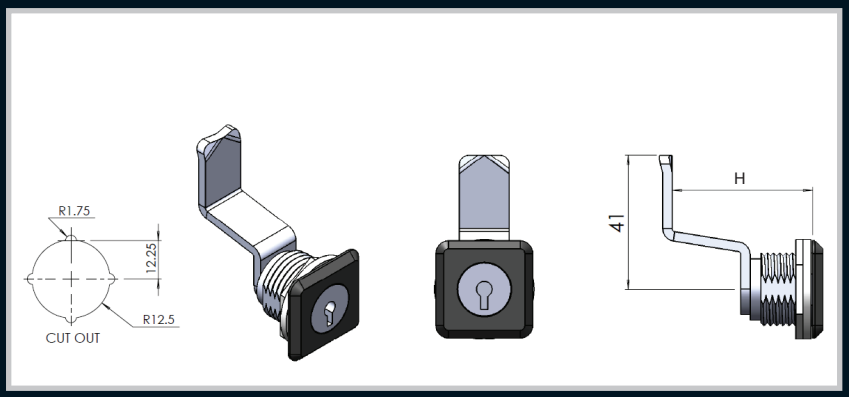

Remarks:
IP65 panel lock barrel and key driven.

Part Number	Material	Finish	Insert Type	H (mm)
222622/20/60066	ZDC	Black powder coated	Slotted	20
222622/22/60066	ZDC	Black powder coated	Slotted	22
222622/45/60066	ZDC	Black powder coated	Slotted	45
222622/20/60125	ZDC	Black powder coated	Slotted	20
222622/22/60125	ZDC	Black powder coated	Slotted	22
222622/45/60125	ZDC	Black powder coated	Slotted	45

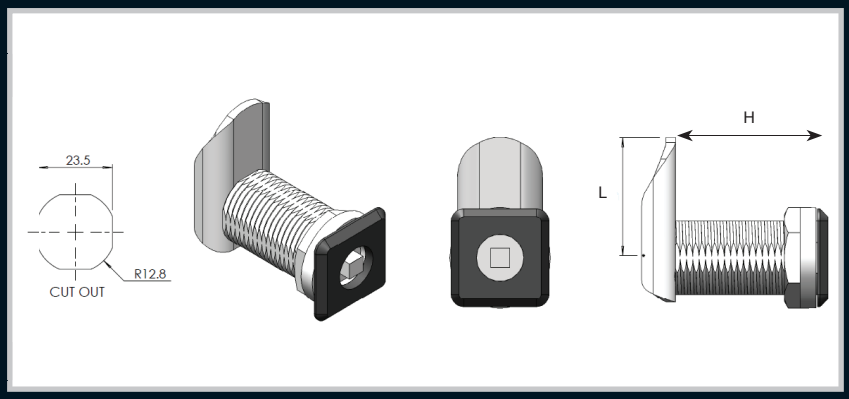

Remarks:
IP 65 panel lock with a 6mm square drive, explosion proof.

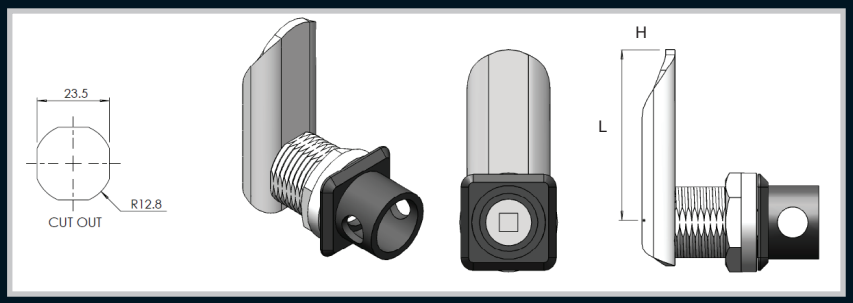

Part Number	Material	Finish	Insert Type	Insert size (mm)	H (mm)	L (mm)
25_A65_270_10	Mild Steel	Black powder coated flange	Square	6	27	31
25_B65_270_10	Mild Steel	Black powder coated flange	Square	6	27	48

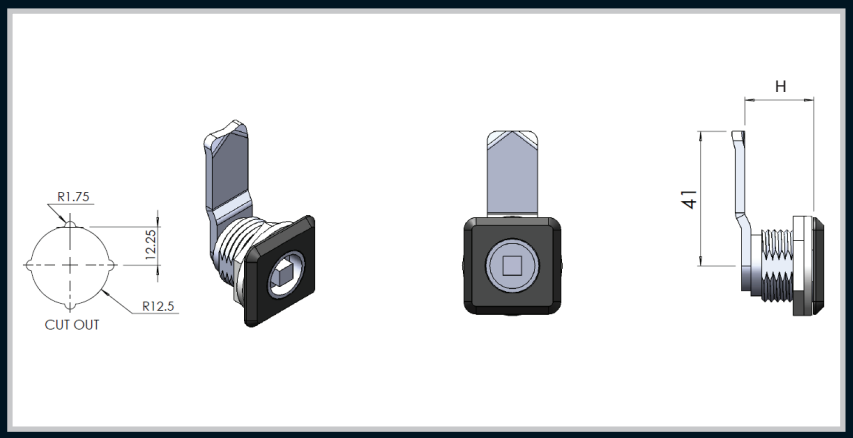

Remarks:
IP 65 panel lock with 6mm square drive.

Part Number	Material	Finish	Insert Type	Insert size (mm)	H (mm)
222622/20	ZDC	Black powder coated	Square	6	20
222622/22	ZDC	Black powder coated	Square	6	22
222622/25	ZDC	Black powder coated	Square	6	25
222622/36	ZDC	Black powder coated	Square	6	36
222622/41	ZDC	Black powder coated	Square	6	41
222622/45	ZDC	Black powder coated	Square	6	45
222622N/20	Nylon	Black powder coated	Square	6	20
222622N/22	Nylon	Black powder coated	Square	6	22
222622N/25	Nylon	Black powder coated	Square	6	25
222622N/36	Nylon	Black powder coated	Square	6	36
222622N/41	Nylon	Black powder coated	Square	6	41
222622N/45	Nylon	Black powder coated	Square	6	45

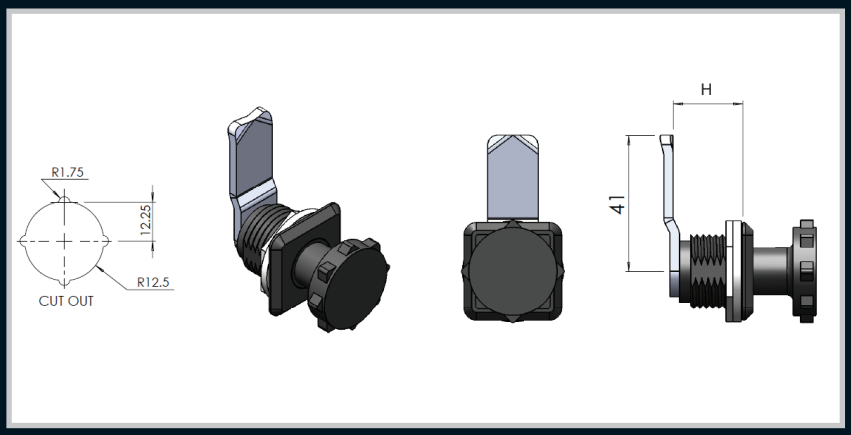

Remarks:
IP 65 panel lock with D31 knob.

Part Number	Material	Finish	Insert Type	Insert size (mm)	H (mm)
222622N/20SS	Nylon	Black Powder Coated	-	-	20
222622/HW/22D31	ZDC	Black Powder Coated	-	-	20

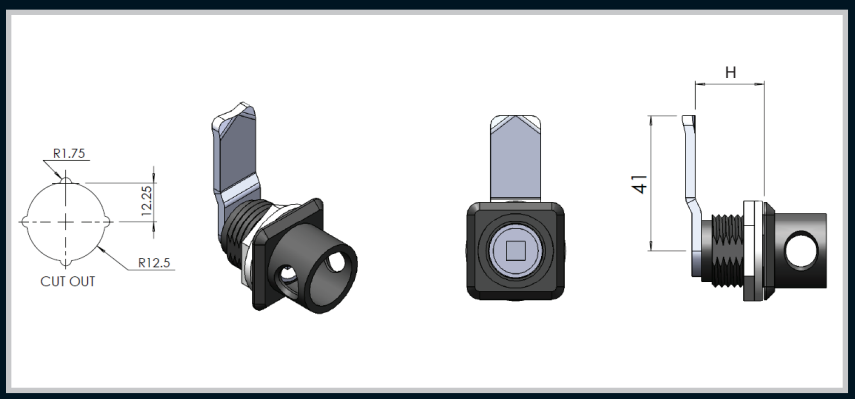

Remarks:
IP 65 pad-lockable panel lock with a 6mm square drive.

Part Number	Material	Finish	Insert Type	Insert size (mm)	H (mm)
222628/20	ZDC	Black Powder Coated	Square	6	20
222628/22	ZDC	Black Powder Coated	Square	6	22
222628/25	ZDC	Black Powder Coated	Square	6	25
222628/36	ZDC	Black Powder Coated	Square	6	36
222628/41	ZDC	Black Powder Coated	Square	6	41
222628/45	ZDC	Black Powder Coated	Square	6	45
222628N/20	ZDC	Black Powder Coated	Square	6	20
222628N/22	ZDC	Black Powder Coated	Square	6	22
222628N/25	ZDC	Black Powder Coated	Square	6	25
222628N/36	ZDC	Black Powder Coated	Square	6	36
222628N/41	ZDC	Black Powder Coated	Square	6	41
222628N/45	ZDC	Black Powder Coated	Square	6	45

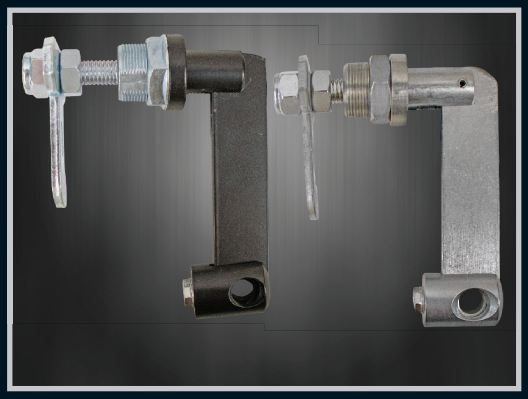

Remarks:
Heavy duty lever lock available in ZDC or stainless steel.

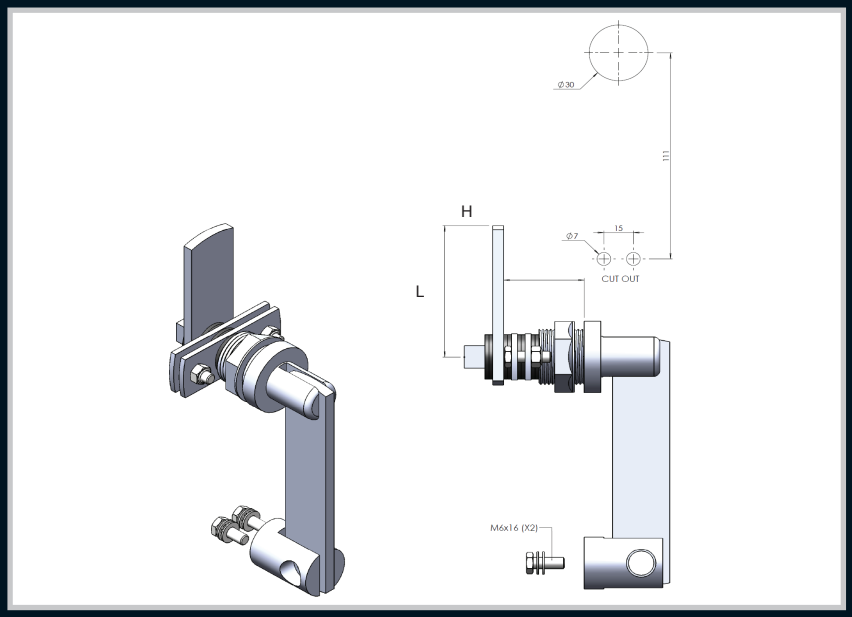

Part Number	Description	H (mm)	L (mm)
1010175	ZDC body and MS Cam	45	70
1010175S/S	Complete Stainless steel	45	70
1010175T/S	Mild Steel with threaded shaft	45	70
1010175S/S-T/S	Stainless steel with threaded shaft	45	70

Remarks:
IP65 quarter turn lever lock Eskom approved.
Refer to page 159 for cam selection.

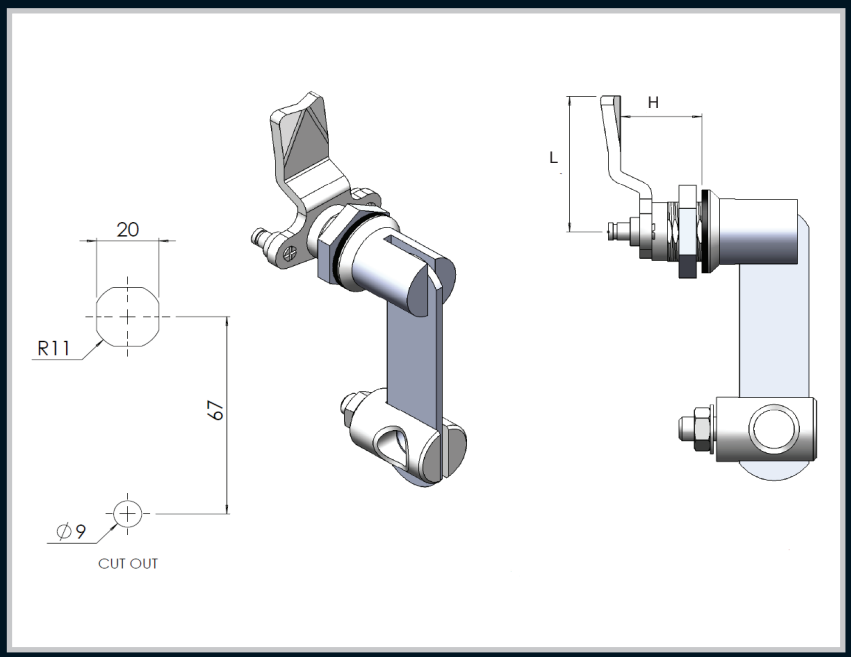

Part Number	Description	L (mm)	H (mm)
22_4_08_STRTS/S	Complete stainless steel	46	22
22_4_08STEPS/S	Complete stainless steel	46	26

Remarks:
Municipal safety lever lock with a 3 hole locking system.

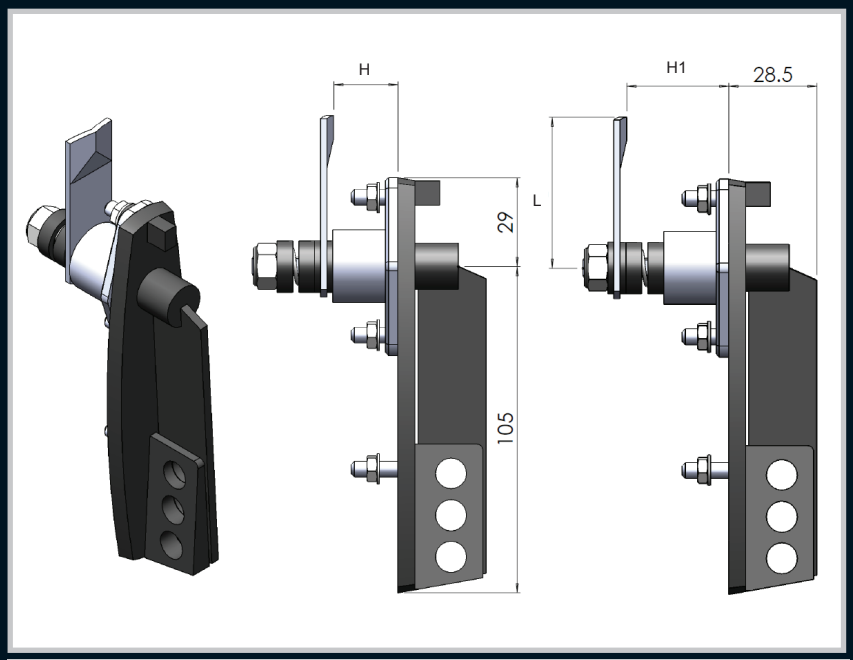

Part Number	Description	H (mm)	L (mm)	H1 (mm)
16_4_432_01/MS/3H	ZDC body with MS cam	30	35	30
16_4_432_02/MS/3H	ZDC body with MS cam	22	38	32
16_4_432_03/MS/3H	ZDC body with MS cam	28	40	38
16_4_432_04/MS/3H	ZDC body with MS cam	25	30	31
16_4_432_05/MS/3H	ZDC body with MS cam	25	31	50
16_4_432_06/MS/3H	ZDC body with MS cam	22	55	48
16_4_612_01/MS/3H	ZDC body with MS cam	30	50	30
16_4_612_02/MS/3H	ZDC body with MS cam	20	50	32
16_4_612_03/MS/3H	ZDC body with MS cam	28	52	38
16_4_612_04/MS/3H	ZDC body with MS cam	25	64	31
16_4_612_05/MS/3H	ZDC body with MS cam	25	64	50
16_4_612_06/MS/3H	ZDC body with MS cam	22	55	48
16_4_432_01/SS/3H	Complete stainless steel body and cam	30	35	30
16_4_432_02/SS/3H	Complete stainless steel body and cam	22	38	32
16_4_432_03/SS/3H	Complete stainless steel body and cam	28	40	38
16_4_432_04/SS/3H	Complete stainless steel body and cam	25	30	31
16_4_432_05/SS/3H	Complete stainless steel body and cam	25	31	50
16_4_432_06/SS/3H	Complete stainless steel body and cam	22	55	48
16_4_612_01/SS/3H	Complete stainless steel body and cam	30	35	30
16_4_612_02/SS/3H	Complete stainless steel body and cam	22	38	32
16_4_612_03/SS/3H	Complete stainless steel body and cam	28	40	38
16_4_612_04/SS/3H	Complete stainless steel body and cam	25	30	31
16_4_612_05/SS/3H	Complete stainless steel body and cam	25	31	50
16_4_612_06/SS/3H	Complete stainless steel body and cam	22	55	48

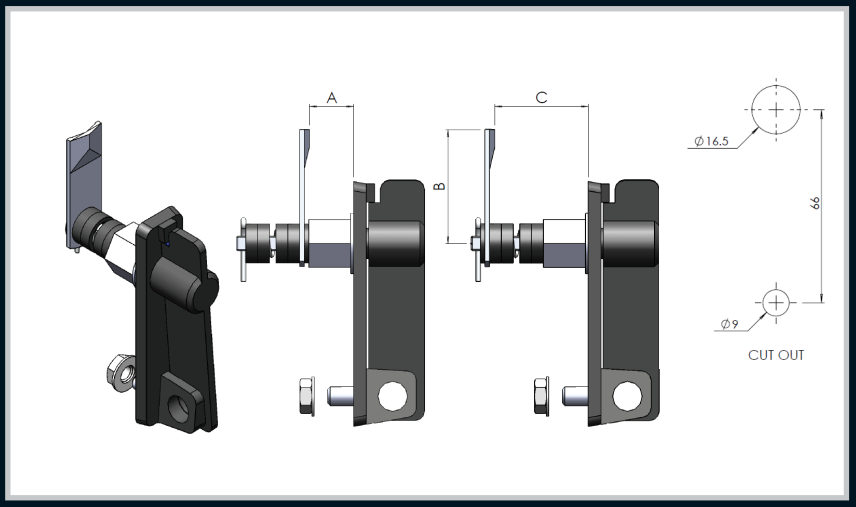

Remarks:
Light duty lever lock with adjustable depths, refer to page 159 for cam selection.

Part Number	Description	A (mm)	B (mm)	C (mm)
16_4_432_01	ZDC Body with MS cam,Black powder coated	22	30	30
16_4_612_01	ZDC Body with MS cam,Black powder coated	22	50	30
16_4_432_04n/z	ZDC Body with MS cam,Black powder coated	11	47	34
16_4_612_04n/z	ZDC Body with MS cam,Black powder coated	11	65	34
16_4_432_05n/z	ZDC Body with MS cam,Black powder coated	11	47	48
16_4_612_05n/z	ZDC Body with MS cam,Black powder coated	11	65	48
16_4_432_06	ZDC Body with MS cam,Black powder coated	17	37	49
16_4_612_06	ZDC Body with MS cam,Black powder coated	17	55	49
16_4_432_08	ZDC Body with MS cam,Black powder coated	17	37	49
16_4_612_08	ZDC Body with MS cam,Black powder coated	17	55	49
16_4_432_09n/z	ZDC Body with MS cam,Black powder coated	22	35	37
16_4_612_09n/z	ZDC Body with MS cam,Black powder coated	22	53	37

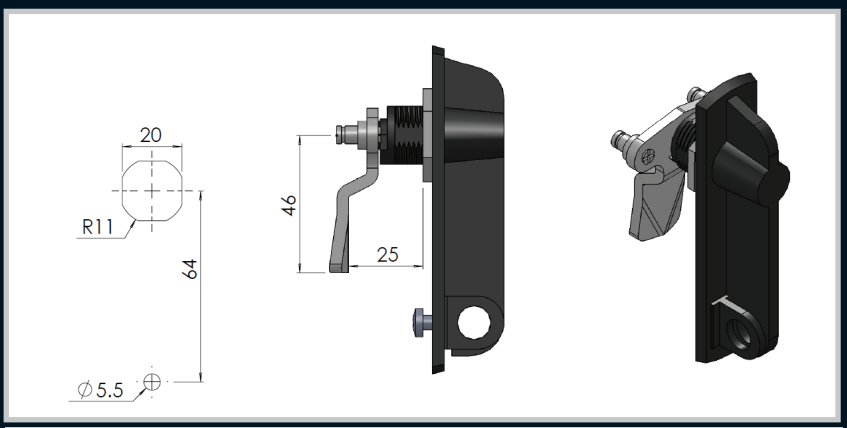

Remarks:
Refer to page 159 for 3 point locking cam selection.

Part Number	Description	L (mm)	H (mm)
22_4_00_08	ZDC Black powder coated, MS cam Galvanized	46	25

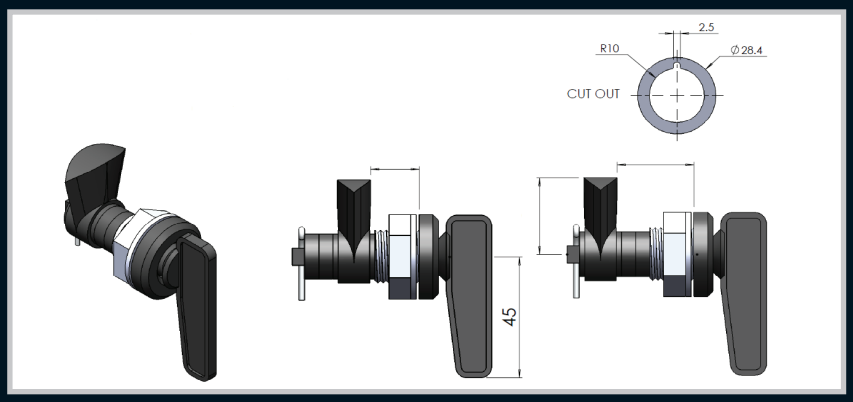

Remarks:
Mini lever lock with adjustable depths, refer to page 159 for cam selection.

Part Number	Description	L (mm)	H (mm)	H1 (mm)
20_7_331_01	ZDC body and lever, Black powder coated	30	17	28
20_7_561_01	ZDC body and lever, Black powder coated	30	17	45
20_7_331_04n/z	ZDC body and lever, Black powder coated	34	7	43
20_7_561_04n/z	ZDC body and lever, Black powder coated	34	7	59
20_7_331_05n/z	ZDC body and lever, Black powder coated	48	6	43
20_7_561_05n/z	ZDC body and lever, Black powder coated	48	6	59
20_7_331_06P	ZDC body and lever, Black powder coated	49	13	35
20_7_561_06	ZDC body and lever, Black powder coated	49	13	49
20_7_331_08	ZDC body and lever, Black powder coated	49	13	35
20_7_561_08	ZDC body and lever, Black powder coated	49	13	49
20_7_331_09n/z	ZDC body and lever, Black powder coated	37	18	33
20_7_561_09n/z	ZDC body and lever, Black powder coated	37	18	48

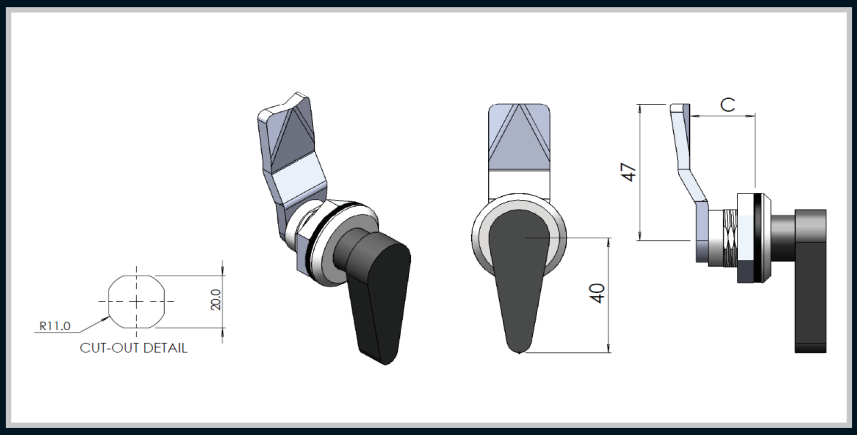

Remarks:
Mini lever lock with adjustable depths, refer to page 159 for cam selection.

Part Number	Description	L (mm)	H (mm)
T26_20	ZDC Body with stainless steel cam	47	20
T26_22	ZDC Body with stainless steel cam	47	22
T26_25	ZDC Body with stainless steel cam	47	25
T26_36	ZDC Body with stainless steel cam	47	36
T26_41	ZDC Body with stainless steel cam	47	41
T26_45	ZDC Body with stainless steel cam	47	45

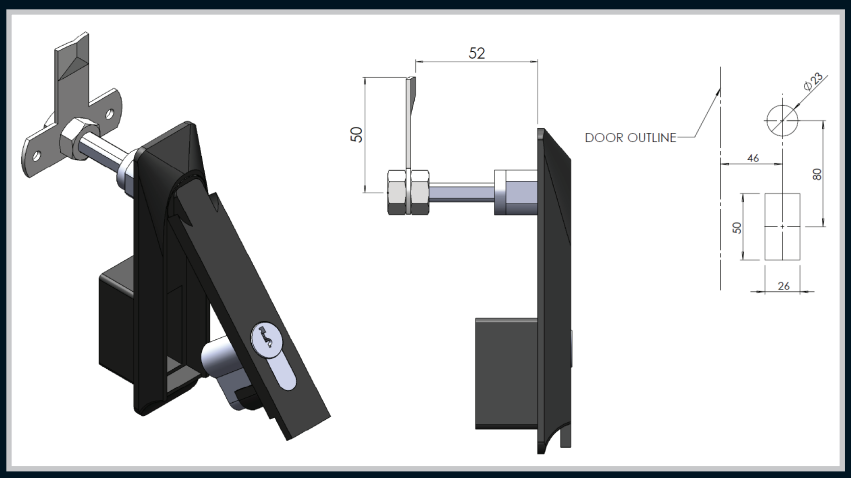

Remarks:
Available in 4 finishes, black base with black handle, black base with chrome handle, complete chrome, stainless steel.

Part Number	Description
10111KZK190	ZDC body with M/S cam shaft
10111KZK191	ZDC body with M/S cam shaft
10111KZK192	ZDC body with M/S cam shaft
10111KZK193	ZDC body with M/S cam shaft
10111KZK194	ZDC body with M/S cam shaft
10111KZK195	ZDC body with M/S cam shaft

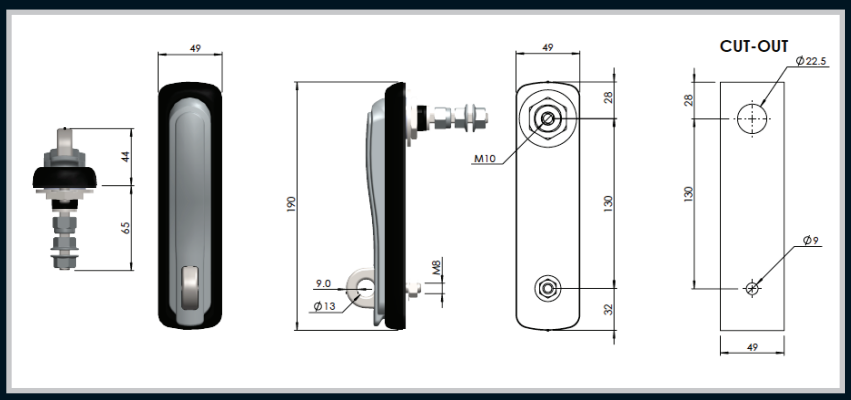

Part Number	Description
10333PBC-HD	Push padlockable swing handle ,black base, chrome handle
10333PC-HD	Push padlockable swing handle , chrome base and handle

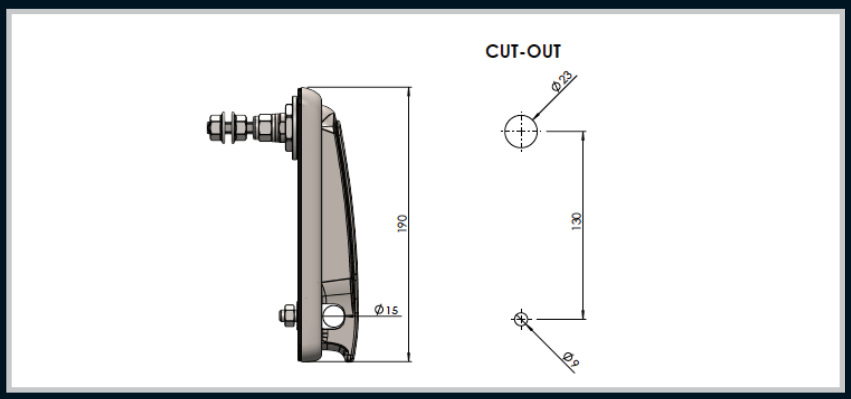

Part Number	Description
10444PS/SHD	Padlockable Heavy Duty Swing Handle, Stainless Steel

Notes:

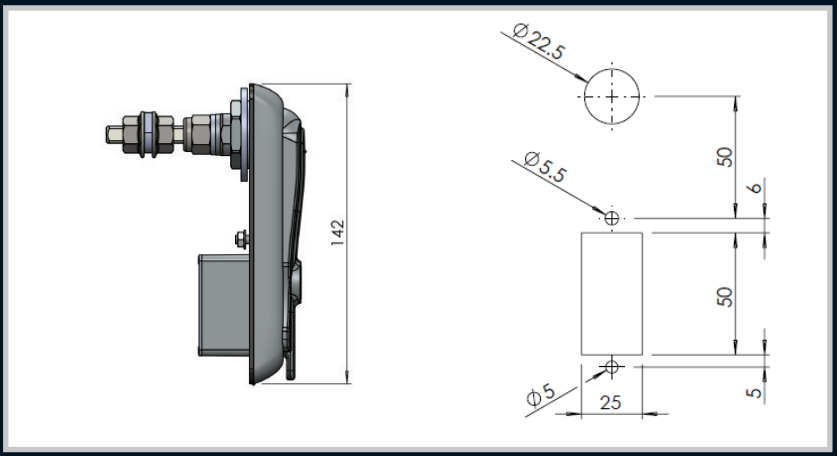

Remarks:

- Quality chrome plated and superior 316 grade stainless steel models available.
- Standard 92268 and CL001 barrel types.
- Half-Euro cylinder types in 92268 & CL001 key.
- Sleek, modern styling.
- Smooth, user friendly operation with snap shut Anti-tamper and Anti-vibration system.
- These swing handles are supplied without a cam. The recommended cam is CAM08M/S8COMP.

Part Number	Description
10333K/CL001	Chrome swing handle locking with standard CL001 barrel
10333K/92268	Chrome swing handle locking with standard 92268 barrel

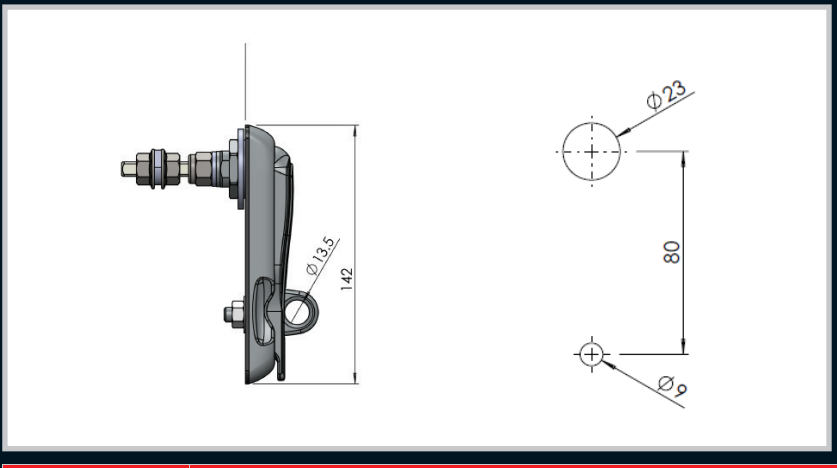

Remarks:

- Quality chrome plated and superior 316 grade stainless steel models available.
- Smooth, user friendly operation with snap shut Anti-tamper and Anti-vibration system.
- These swing handles are supplied without a cam. The recommended cam is CAM08M/S8COMP.

Part Number	Description
10333PC	Chrome swing handle padlockable
10333PB	Padlockable swing handle with black finish
10333PS/S	316 Stainless steel swing handle padlockable

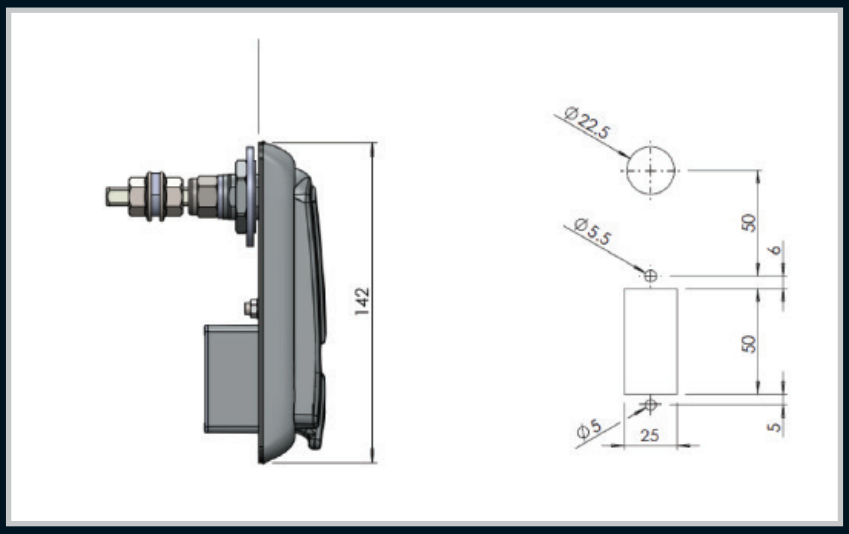

Remarks:

- Quality chrome plated and superior 316 grade stainless steel models available.
- Standard 92268 and CL001 barrel types.
- Half-Euro cylinder types in 92268 & CL001 key.
- Half-Euro cylinder : 40mm profile
- Sleek, modern styling.
- Smooth, user friendly operation with snap shut Anti-tamper and Anti-vibration system.

Part Number	Description
10444KSSHEC/CL001	316 Stainless steel swing handle locking with Half-Euro cylinder with CL001 barrel
10444SSHEC/92268	316 Stainless steel swing handle locking with Half-Euro cylinder with 92268 barrel
10444KHEC/CL001	Chrome swing handle locking with Half-Euro cylinder with CL001 barrel
10444KHEC/92268	Chrome swing handle locking with Half-Euro cylinder with 92268 barrel
10444K/WOC	Chrome swing handle Half-Euro with no cylinder
10444S/SWOC	316 Stainless steel swing handle Half-Euro with no cylinder

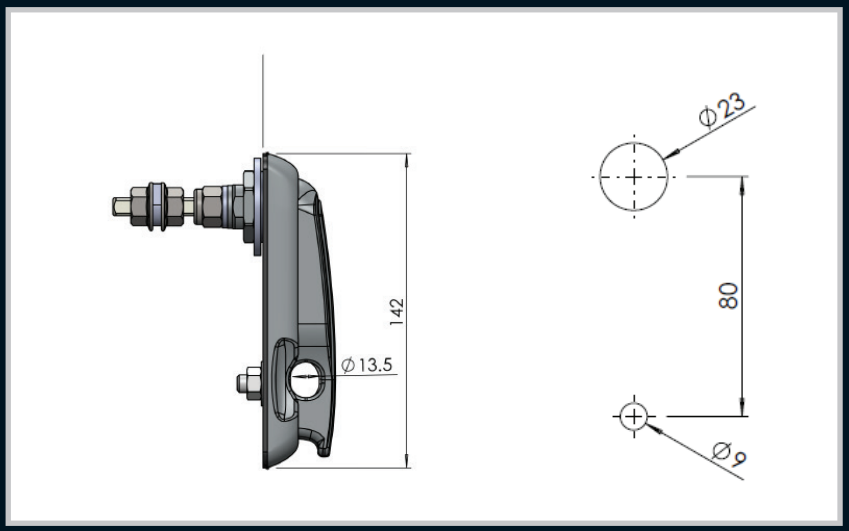

Remarks:

- Quality chrome plated and superior 316 grade stainless steel models available.
- Sleek modern styling with concealed padlock Hasp for added security.
- Smooth, user friendly operation with snap shut Anti-tamper and Anti-vibration system.

Part Number	Description
10444PC	Chrome swing handle padlockable
10444PB	Padlockable swing handle with black finish
10444PS/S	316 Stainless steel swing handle padlockable

*** Kindly note that some of our products may not be available in your country. Please contact our sales department to enquire as to the availability of specific products.**

Remarks:
Quick Assembly swing handle.
Available in key alike and key different.

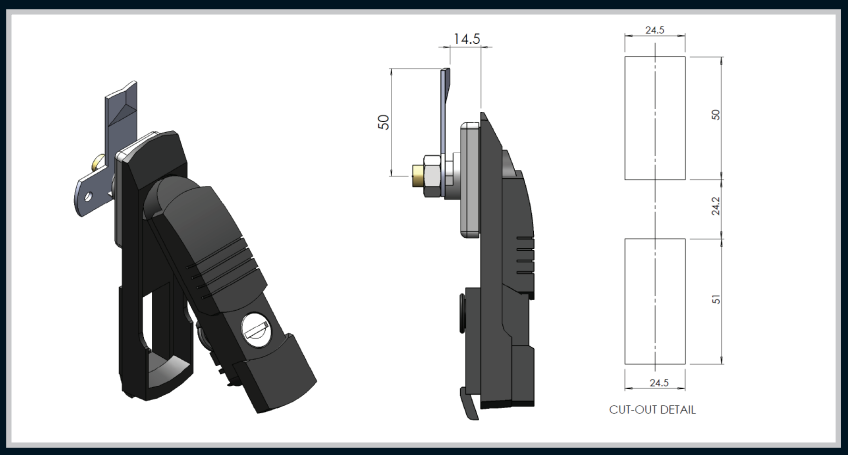

Part Number	Material and Finish	Description
FNSH/HOOK/SK	Nylon Matt Black	Swing handle with profile cylinder, slide dust cap and hook for quick fitments
FNSH/HOOK/DK	Nylon Matt Black	Swing handle with profile cylinder, slide dust cap and hook for quick fitments

Remarks:
IP65 swing handle.
Available in key alike and key different.

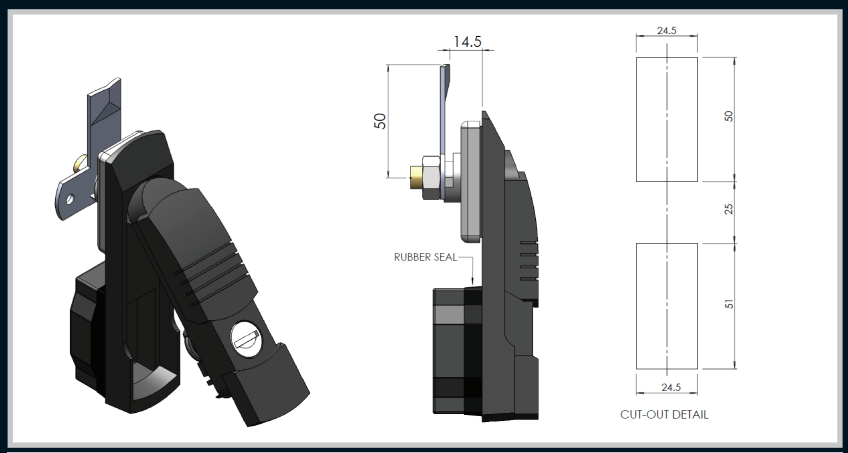

Part Number	Material and Finish	Description
FNSH/65	Nylon Matt black	Swing handle with profile cylinder, slide dust cap and rubber gasket with cap for IP65 rating

Remarks:
Available in key alike and key different.
For key different option add “D” to part number

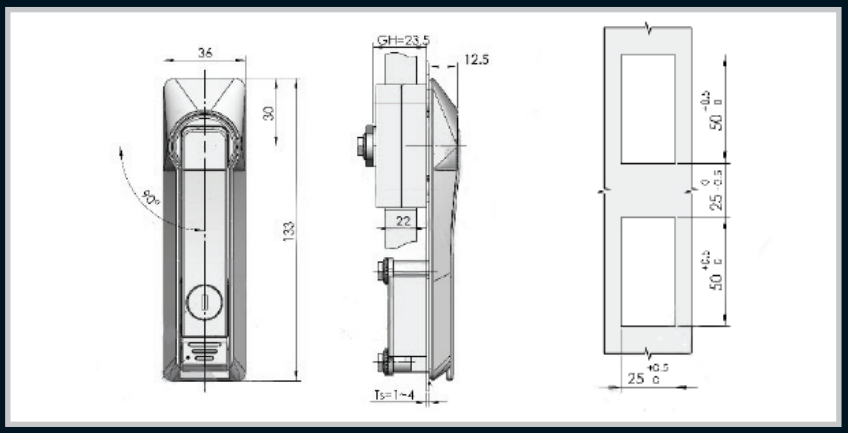

Part Number	Description
50_2_23_P_B/K	Key lockable flush swing handle with push button , Black
50_2_23_P_B/K-92268	Key lockable flush swing handle with push button , Black
50_2_23_P_C/K	Key lockable flush swing handle with push button , Chrome
50_2_23_B/K	Key lockable swing handle 90 degree rotation , Black
50_2_23_C/K	Key lockable swing handle 90 degree rotation , Chrome

Remarks:
Available in key alike and key different.
For key different option add “D” to part number. (Example: 150_2_20_B/K/D)

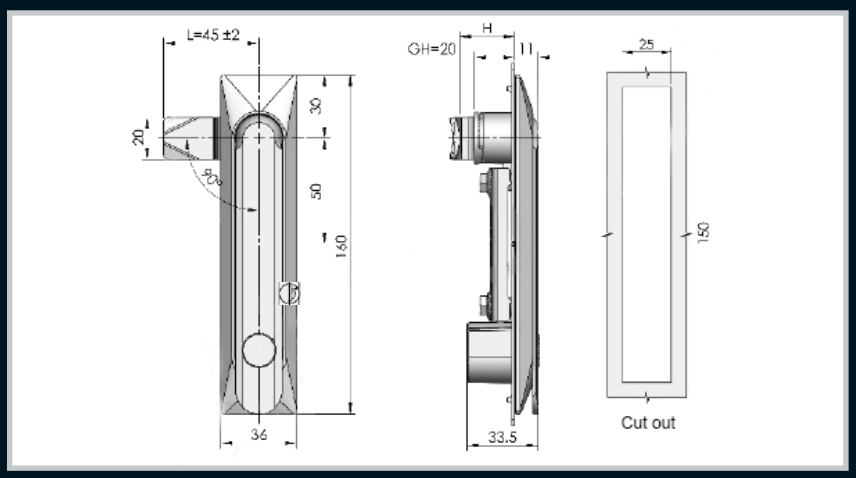

Part Number	Description
150_2_20_B/K	Key lockable swing handle, Black

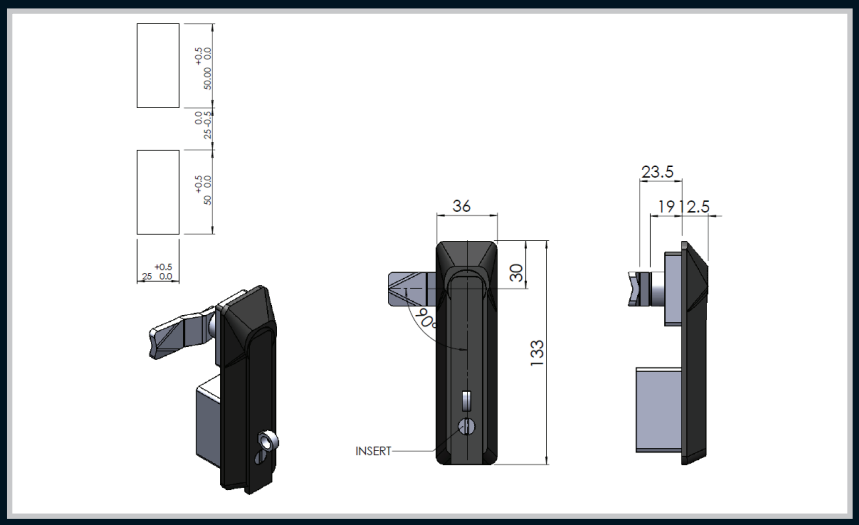

Part Number	Description
50_4_23_B/P	Padlockable swing handle Black powder coated ZDC
50_4_23_PS/S	Padlockable swing handle full stainless steel

Remarks:
Available in key alike and key different.
For key different option add “D” to part number. (Example: 164_1_50_N/K/D)

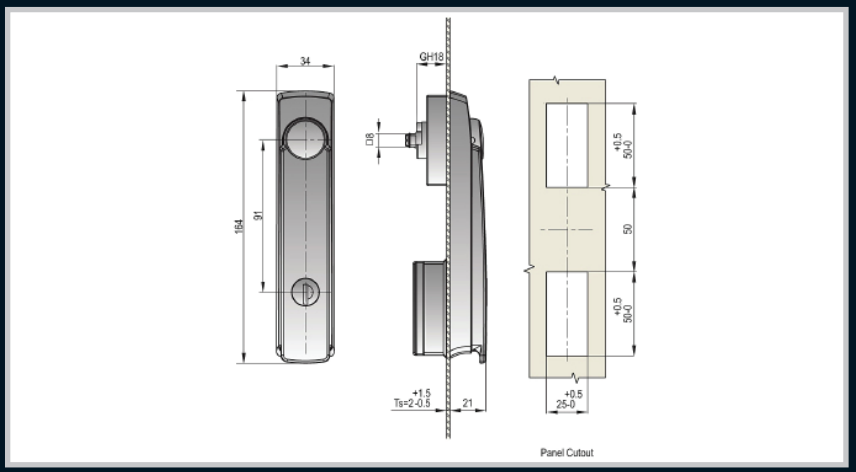

Part Number	Description
164_1_50_N/K	Nylon body and handle , key lockable
164_1_50_ZN/K	Nylon body and Zinc die handle, key lockable

Remarks:
Available in key alike and key different.
For key different option add “D” to part number. (Example: 160_1_50_BK/RLS/D)

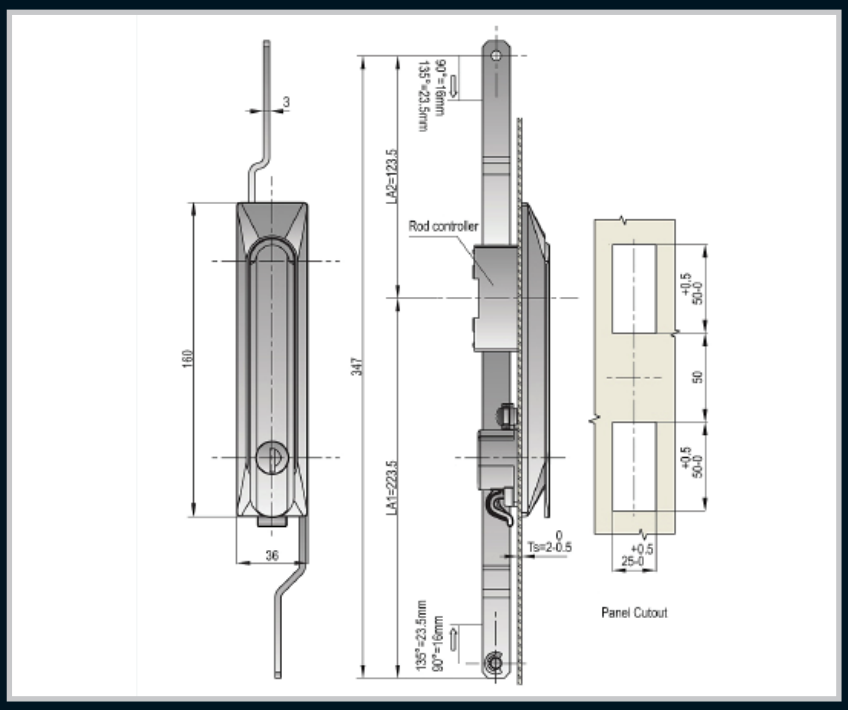

Part Number	Description
160_1_50_BK/RLS	Black powder coated , Key lockable

Remarks:
Available in key alike and key different.
For key different option add “D” to part number. (Example: 120_1_100_Z/BK/D)

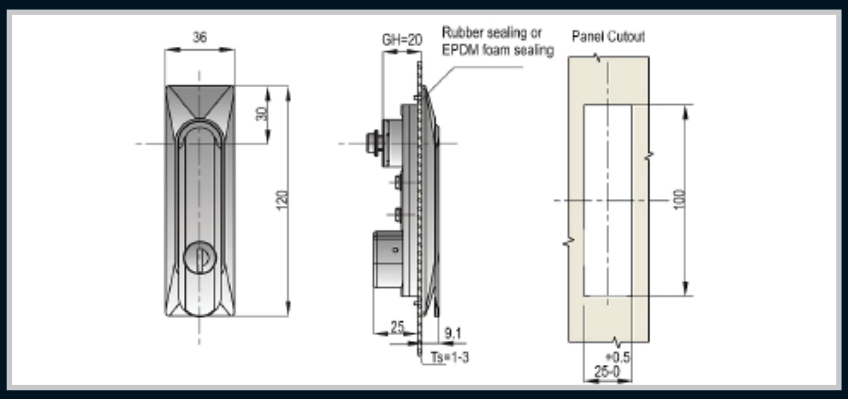

Part Number	Description
120_1_100_ZN/BK	Zinc handle with Nylon housing, key lockable
120_1_100_Z/BK	Full Zinc, key lockable

Remarks:
Available in key alike and key different.
For key different option add “D” to part number. (Example: 46_3_39_PA/P/D)

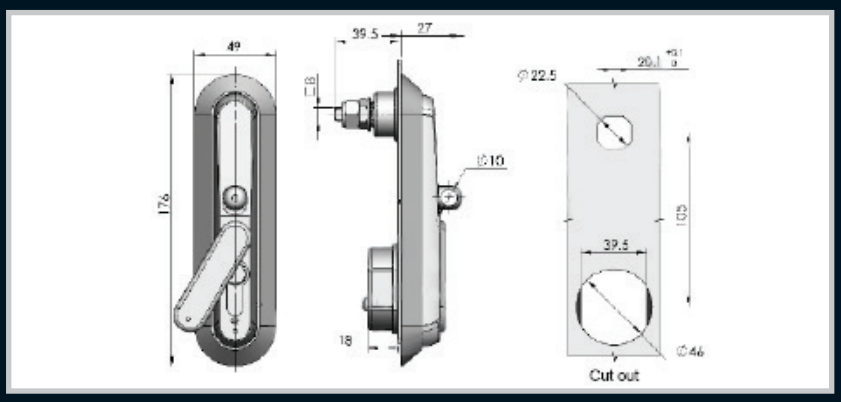

Part Number	Description
46_3_39_PA/P	ZDC handle and PA housing (with padlock)

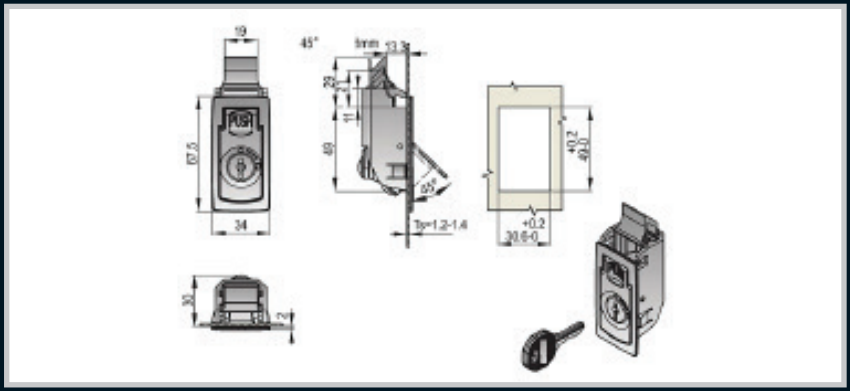

Part Number	Description
49_10_K	Key locking , Black PA

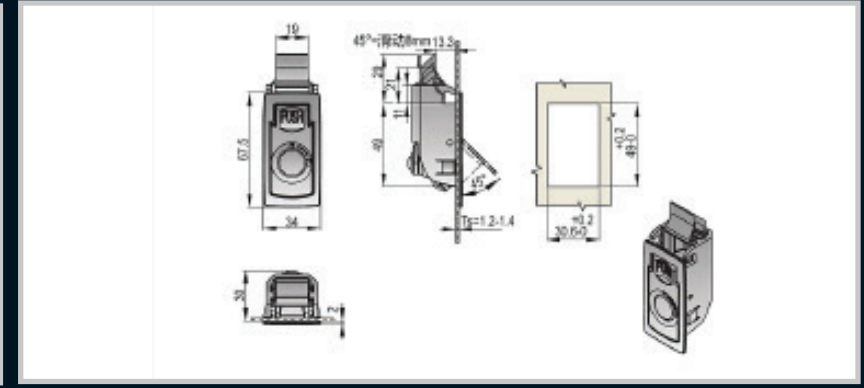

Part Number	Description
49_00_0	Non locking, Black PA

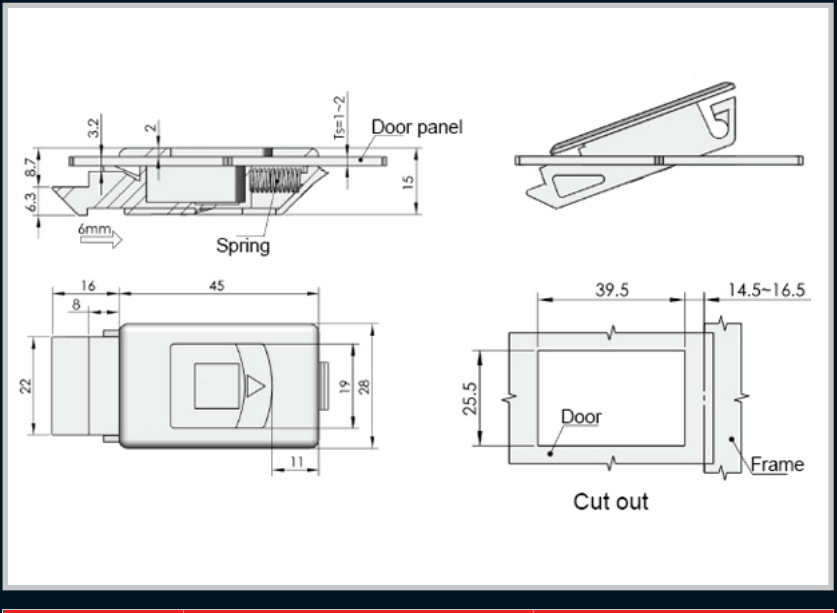

Part Number	Description	Material and Finish
39_1_3B	Push to close snap-in lock	PA Black

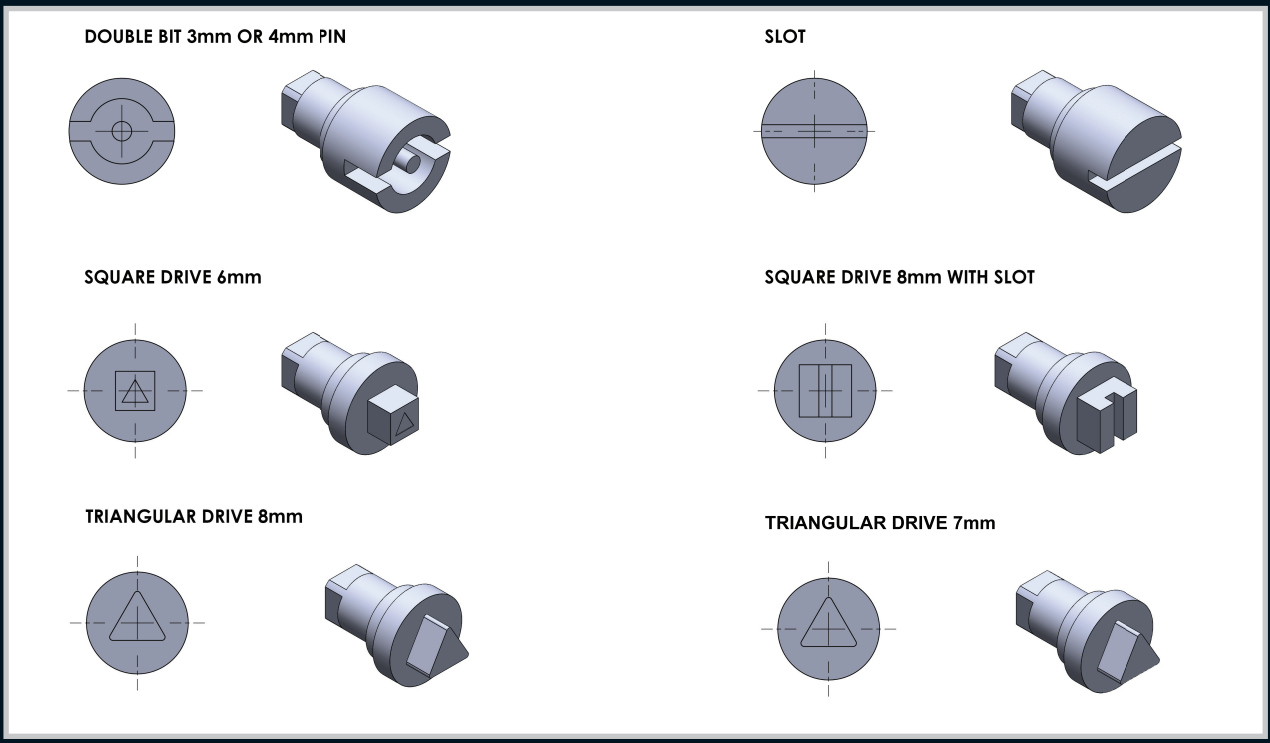

Remarks:
Drives are available in ZDC, PA or stainless steel.

Notes:

LOCKS CODING SYSTEM
CODE NUMBER

16.1.431.01

- CAM TYPE
- KEY SIZE
- SHAFT CAPACITY (USABLE SHAFT)
- FRONT TYPE
- HOLE SIZE

Cams to fit 16 series locks

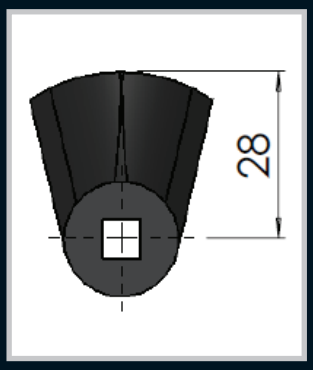

Part Number	Material and Finish	Description
CAM01N	Nylon black	Cam to suit series 16

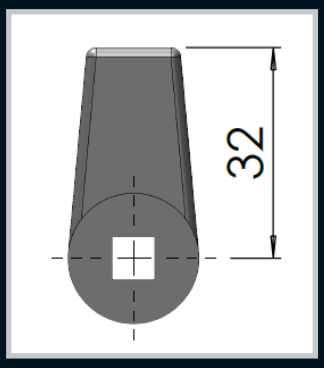

Part Number	Material and Finish	Description
CAM02N	Nylon black	Tapered cam to suit series16

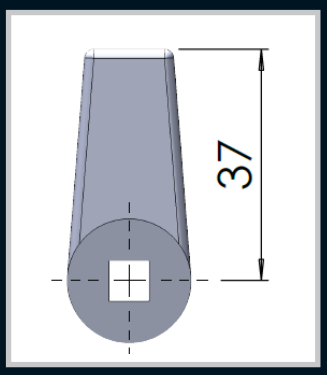

Part Number	Material and Finish	Description
CAM03Z	ZDC Galvanized	Tapered cam to suit series16

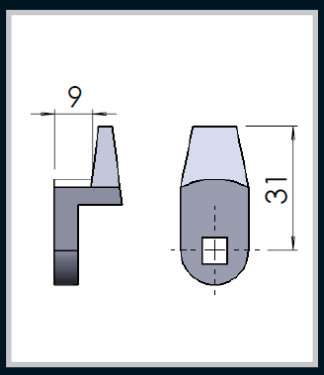

Part Number	Material and Finish	Description
CAM04N	Nylon black	Cam with a 9mm step to suit series 16

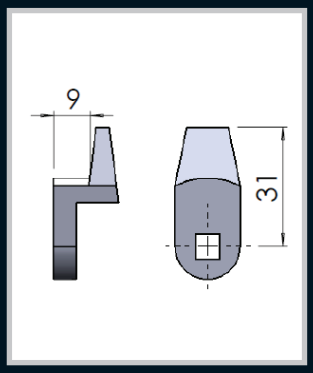

Part Number	Material and Finish	Description
CAM04Z	ZDC matt silver	Cam with a 9mm step cam to suit series 16

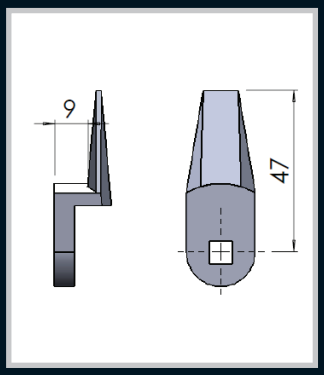

Part Number	Material and Finish	Description
CAM05N	Nylon black	Cam with a 9mm step to suit series 16

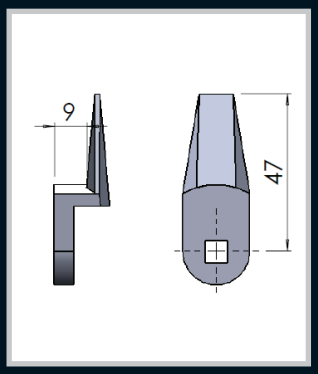

Part Number	Material and Finish	Description
CAM05Z	ZDC Galvanized	Cam with a 9mm step to suit series 16

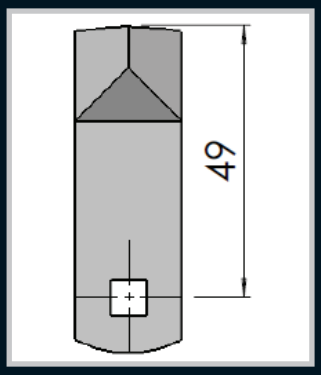

Part Number	Material and Finish	Description
CAM06S/S	Stainless steel natural finish	Cam to suit handle 1011108

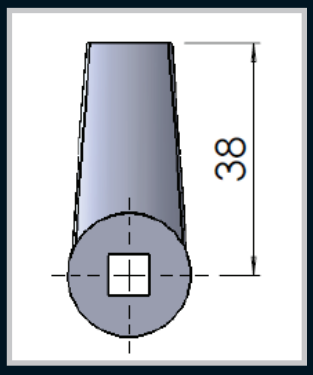

Part Number	Material and Finish	Description
CAM09N	Nylon black	Cam to suit 16 series

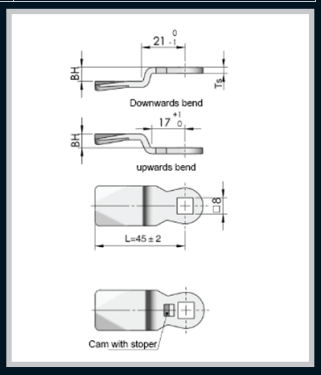

Part Number	Material and Finish	Description
CAM08/4	Mild steel	4mm bend
CAM08/12	Mild steel	12mm bend

Remarks:
All other BH dimensions available on request.

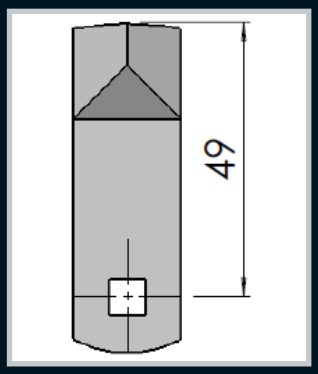

Part Number	Material and Finish	Description
CAM06M/S	Mild steel natural finish	Cam to suit handle 1011108

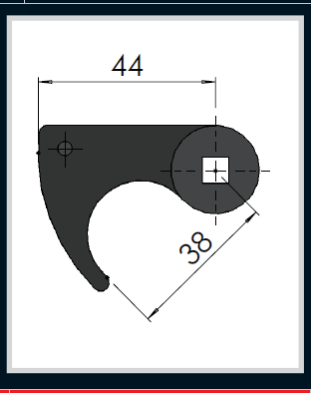

Part Number	Material and Finish	Description
CAM07N	Nylon black	Hooked cam to suit 16 series

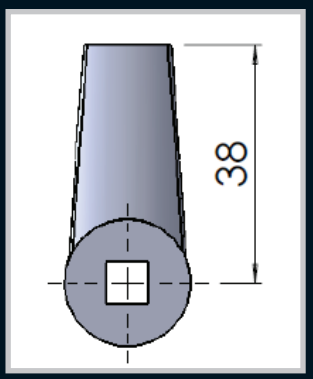

Part Number	Material and Finish	Description
CAM09Z	ZDC Galvanized	Cam to suit 16 series

3 Point locking cams

(For use with locking rods on page 170 - 171)

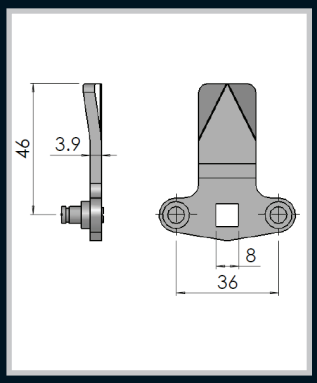

Part Number	Material and Finish	Description
CAM08M/S8PSTR	Mild steel natural finish	3 point cam
CAM08S/S8PSTR	Stainless steel natural finish	3 point cam

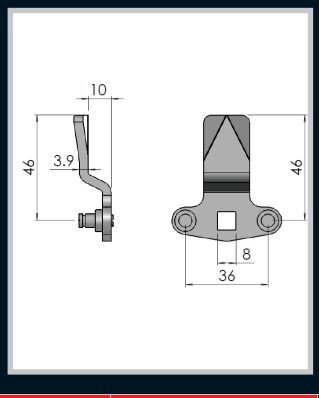

Part Number	Material and Finish	Description
CAM08M/S8STEP	Mild steel natural finish	3 point cam
CAM08S/S8STEP	Stainless steel natural finish	3 point cam
CAM08/4.3	Mild steel with a 4mm bend	3 point cam
CAM08/12.3	Mild steel with a 12mm bend	3 point cam

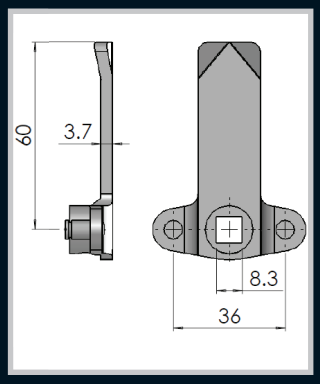

Part number	Material and Finish	Description
CAM08M/SPINS	Mild steel natural finish	3 point cam

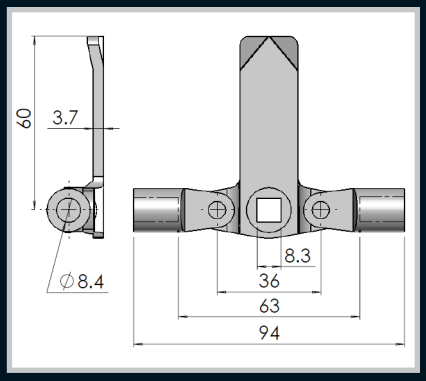

Part Number	Material and Finish	Description
CAM08M/S8COMP	Mild steel natural finish	3 point cam with Rod adaptors
CAM08S/S8COMP	Full stainless steel natural finish	3 point cam with Rod adaptors

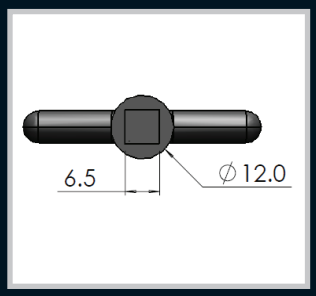

Part Number	Material and Finish	Description
6_1_12_1	ZDC Galvanized	T-shaped key 57mm long to unlock all quarter turn series with a 6mm square drive

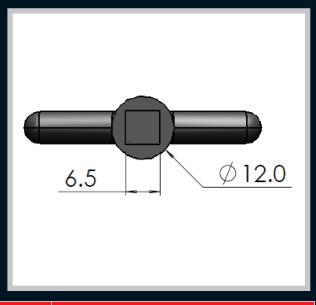

Part Number	Material and Finish	Description
6_1_12_2	Polycarbonate	T-shaped key 57mm long to unlock all quarter turn series with a 6mm square drive

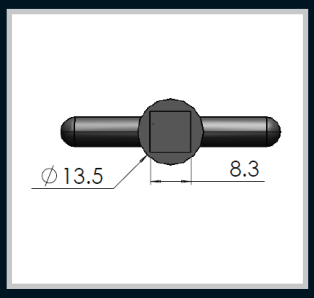

Part Number	Material and Finish	Description
8_2_135_1	ZDC Galvanized	T-shaped key 57mm long to unlock all quarter turn series with a 8mm square drive

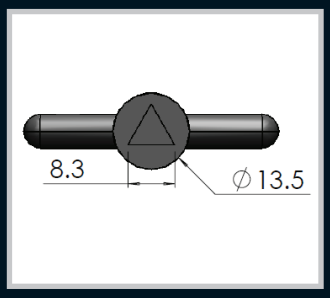

Part Number	Material and Finish	Description
8_3_135_1	ZDC Galvanized	T-shaped key 57mm long to unlock all quarter turn series with a 8mm Triangular drive

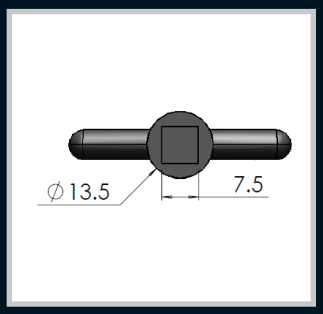

Part Number	Material and Finish	Description
7_2_135_1	ZDC Galvanized	T-shaped key 57mm long to unlock all quarter turn series with a 7mm square drive

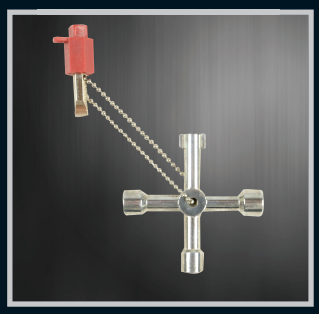

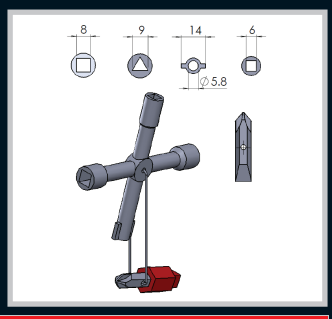

Part Number	Description
6WAY5_135_1	ZDC 8mm & 6mm square, 8mm tri, double bit and screwdriver adaptor

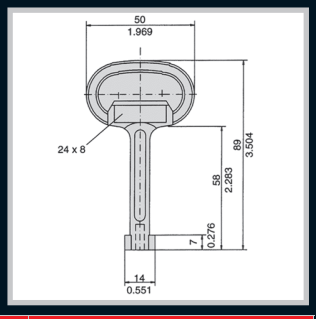

Part Number	Material and Finish	Description
4_1_135_1	ZDC Galvanized	Double bit key