ALLBRO

7

INSULATORS

CATALOGUE EDITION 5

PM
Pg.217

PM
Pg.217

B
Pg.218

SP
Pg.219

SL
Pg.220

SPL
Pg.221

CP
Pg.222

CL & CPL
Pg.223

GL
Pg.224

GP
Pg.225

GPL
Pg.225

HP
Pg.226

HPL & HL
Pg.227

IL
Pg.228

SM
Pg.229

WP
Pg.230

OP
Pg.231

VP & VL
Pg.232

KNOBS
Pg.233

RED STEPPED
Pg.234

RED STEPPED
Pg.234

3 CEN BUSBARS
Pg.235

BUSBAR SUPPORT
Pg.235

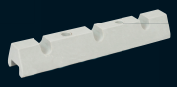
AL BUSBAR
SUPPORT
Pg.236

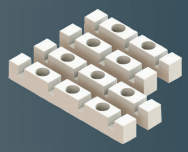
AB BUSBAR
SUPPORT
Pg.236

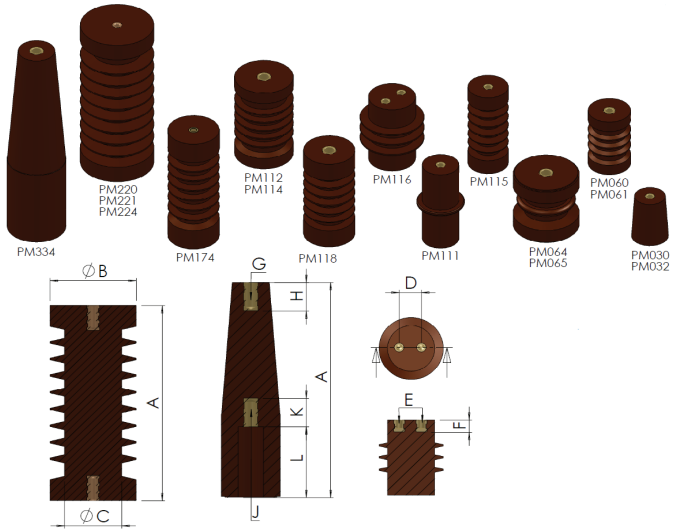

Part Number		Um	A	B	C	D	E	F	G	H	J	K	L	LI (kV)	MIN FAIL (kN)	ACSD (kV)
							Thread Insert (mm)		Thread Insert (mm)		Thread Insert (mm)					
050-180	PM030	3.3kV	70	50	42	-	-	-	1,5 x M10	14	1,5 x M10	10	-	40	4	10
050-181	PM032	3.3kV	70	50	40	25	1,25 x M8	12	-	-	1,25 x M8	10	-	40	4	10
050-100	PM060	6.6kV	90	57	45	-	-	-	1,75 x M12	17	1,75 x M12	17	-	50	4	18
050-116	PM061	6.6kV	90	55	40	32	1,25 x M8	12	-	-	1,25 x M8	12	-	50	4	18
050-111	PM064	6.6kV	90	90	60	50	1,5 x M10	14	-	-	1,5 x M10	14	-	50	5	18
050-104	PM065	6.6kV	90	55	45	32	1,25 x M8	12	-	-	1,75 x M12	17	-	50	4	18
050-120	PM111	11kV	127	60	50	-	-	-	1,5 x M10	22	1,5 x M10	22	-	75	8	28
050-142	PM112	11kV	130	80	62	-	-	-	2 x M16	22	2 x M20	32	-	75	12	28
050-133	PM114	11kV	130	80	62	46	1,5 x M10	14	2 x M16	22	2 x M20	32	20	75	12	28
050-134	PM115	11kV	130	55	-	32	1 x M6	10	1,5 x M10	22	2 x M16	32	14	75	-	28
050-126	PM116	11kV	130	63	87	30	1,5 x M10	17	2 x M10	-	2 x M10	17	-	75	-	28
050-128	PM118	15kV	142	70	70	40	1,25 x M8	12	1,5 x M10	25	2 x M16	30	-	80	9.5	38
050-143	PM174	17.5kV	175	70	50	36	1 x M6	10	1,5 x M10	22	2 x M16	40	20	95	-	38
050-140	PM220	22kV	215	100	80	-	-	-	2 x M16	22	1 x M6	22	-	125	12	50
050-121	PM221	22kV	215	100	80	-	1,75 x M12	25	-	-	1,75 x M12	25	-	125	12	50
050-141	PM224	22kV	215	100	80	50	1,5 x M10	14	2 x M16	22	2 x M20	32	20	125	12	50
050-161	PM334	33kV	295	80	50	-	-	-	1,75 x M12	34	2 x M16	32	98	170	9	70

Recommended Torque (N.m)
M6 = 6 , M8 = 10 , M10 = 12 , M12 = 16 , M16 = 16 , M20 = 16

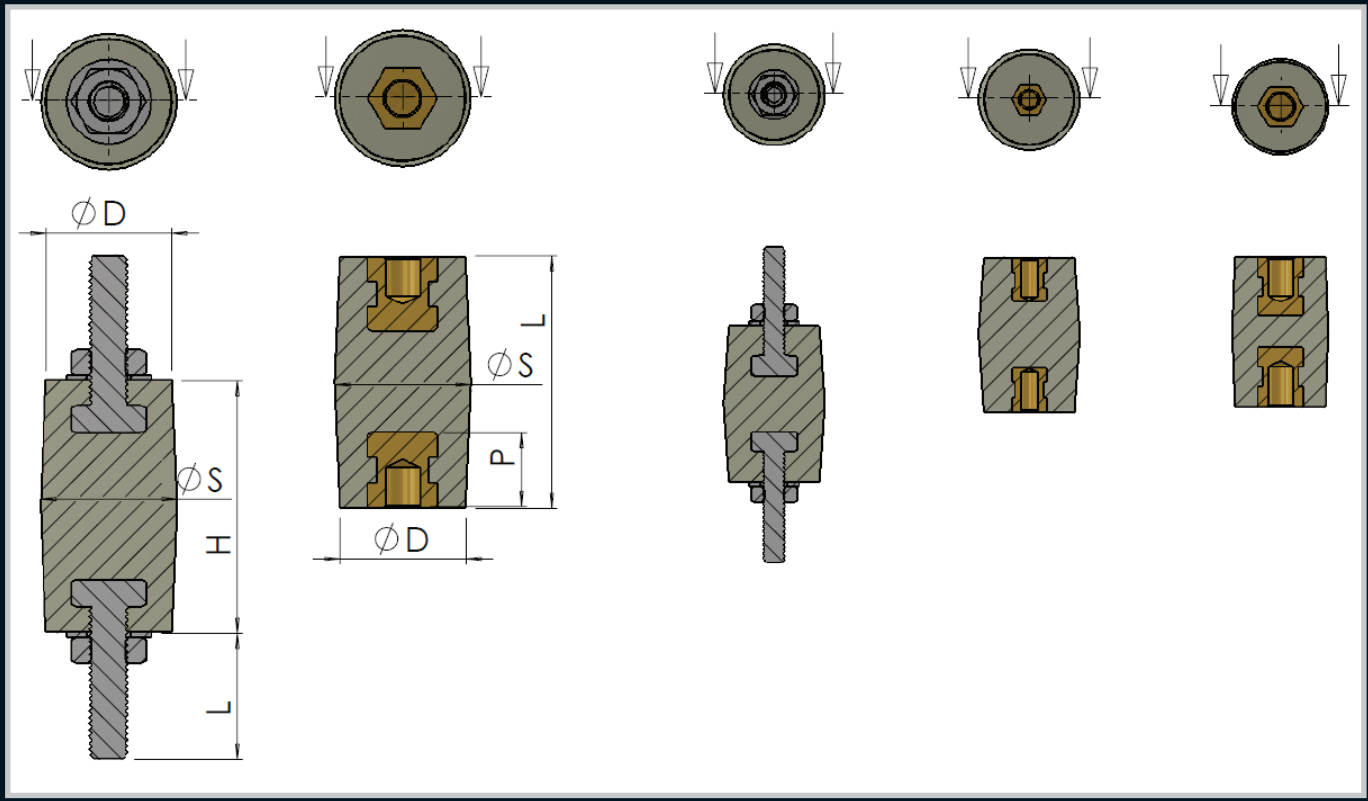

Part Number	Type	Thread Size (mm)	Height H (mm)	Diameter D (mm)	Shed Diameter S (mm)	Stud Length L (mm)	Stud/ Insert	Recommended Torque (N.m)	Insert Depth P (mm)
050-018	BL-8W	1,25	50	25	28	25	M8	10	-
050-017	BP-8W	1,25	50	25	28	-	M8	10	13
050-015	BP-5W	0,8	30	17	20	-	M5	4	8
050-015/BK	BP-5BK	0,8	30	17	20	-	M5	4	8
050-206	BP-6W	1	30	17	20	-	M6	6	11
050-206/BK	BP-6BK	1	30	17	20	-	M6	6	11
050-016	BL-5W	0,8	30	17	20	15	M5	4	-

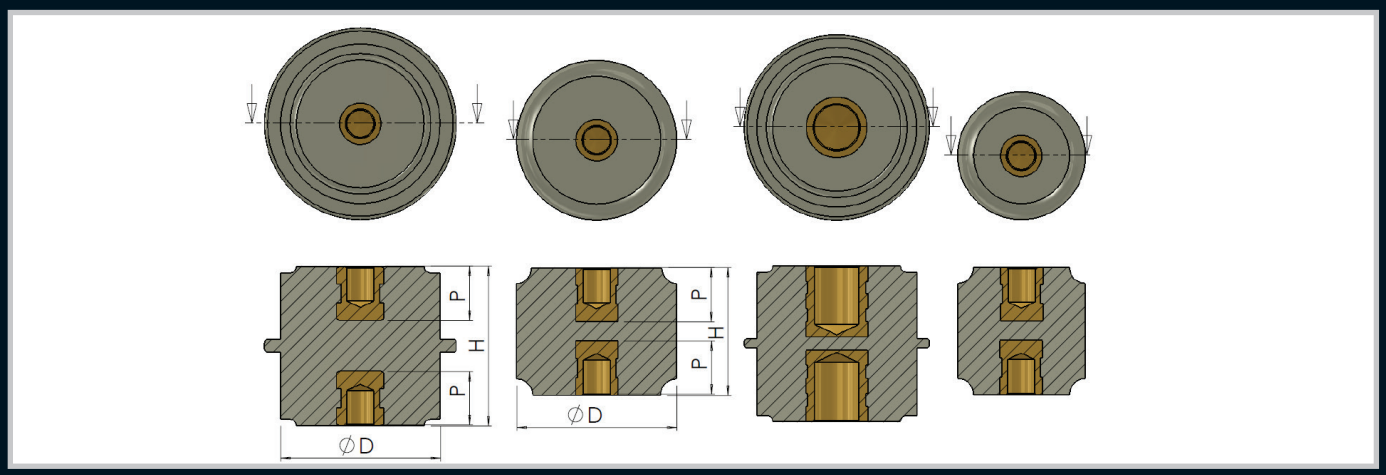

Part Number	Type	Thread Size (mm)	Recommended Torque (N.m)	H (mm)	D (mm)	P (mm)	Stud /Insert
050-055	SP-6/BK	1	6	40	20	12	M6
050-054	SP-6/BL	1	6	40	20	12	M6
050-053	SP-6/R	1	6	40	20	12	M6
050-007	SP-6/W	1	6	40	20	12	M6
050-061	SP-8/BK	1,25	10	40	30	15	M8
050-060	SP-8/BL	1,25	10	40	30	15	M8
050-059	SP-8/R	1,25	10	40	30	15	M8
050-009	SP-8/W	1,25	10	40	30	15	M8
050-033	SP-10/S1/W	1,5	12	63	40	16	M10
050-034	SP-10/S2/W	1,5	12	75	40	16	M10
050-027	SP-10/S2/R	1,5	12	75	40	16	M10
050-228	SP-10/S3/W	1,5	12	40	50	16	M10
050-067	SP-10/BK	1,5	12	40	40	16	M10
050-066	SP-10/BL	1,5	12	40	40	16	M10
050-065	SP-10/R	1,5	12	40	40	16	M10
050-011	SP-10/W	1,5	12	40	40	16	M10
050-073	SP-12/BK	1,75	16	50	50/60	16	M12
050-072	SP-12/BL	1,75	16	50	50/60	16	M12
050-071	SP-12/R	1,75	16	50	50/60	16	M12
050-013	SP-12/W	1,75	16	50	50/60	16	M12

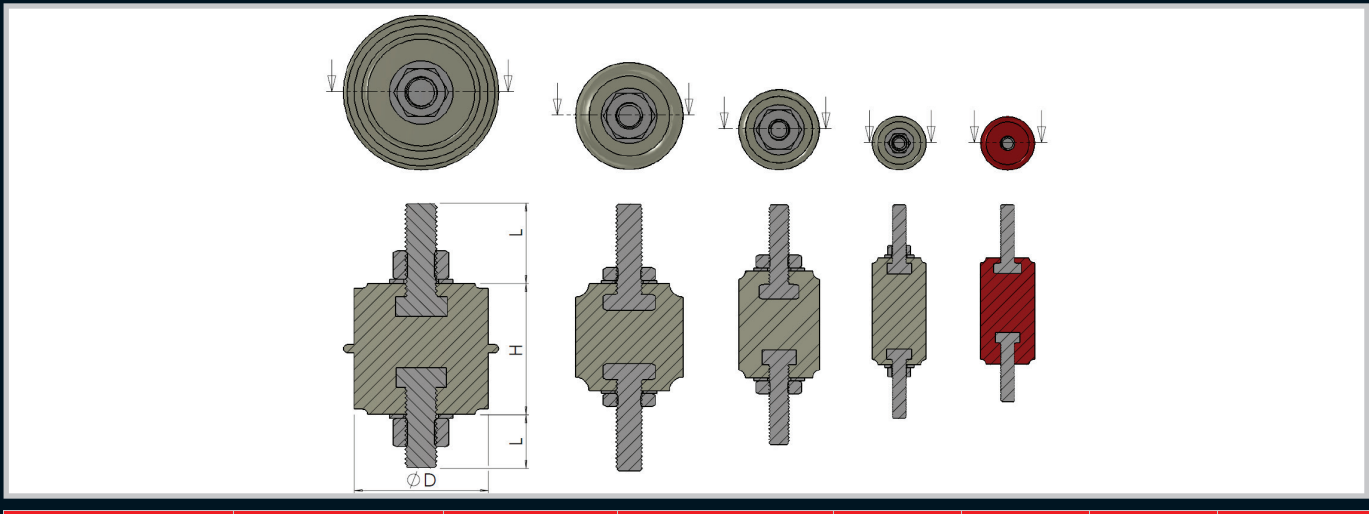

Part Number	Type	Thread Size (mm)	Recommended Torque (N.m)	H (mm)	D (mm)	L (mm)	Stud /Insert
050-056	SL-6R	1	6	40	20	20	M6
050-008	SL-6W	1	6	40	20	20	M6
050-058	SL-6/BK	1	6	40	20	20	M6
050-057	SL-6/BL	1	6	40	20	20	M6
050-010	SL-8/W	1,25	10	40	30	25	M8
050-064	SL-8/BK	1,25	10	40	30	25	M8
050-063	SL-8/BL	1,25	10	40	30	25	M8
050-062	SL-8/R	1,25	10	40	30	25	M8
050-012	SL-10/W	1,5	12	40	40	30	M10
050-070	SL-10/BK	1,5	12	40	40	30	M10
050-069	SL-10/BL	1,5	12	40	40	30	M10
050-068	SL-10/R	1,5	12	40	40	30	M10
050-210	SL-12/W	1,75	16	50	50/60	16	M12
050-278	SL-12/BK	1,75	16	50	50/60	16	M12
050-277	SL-12/BL	1,75	16	50	50/60	16	M12
050-276	SL-12/R	1,75	16	50	50/60	16	M12

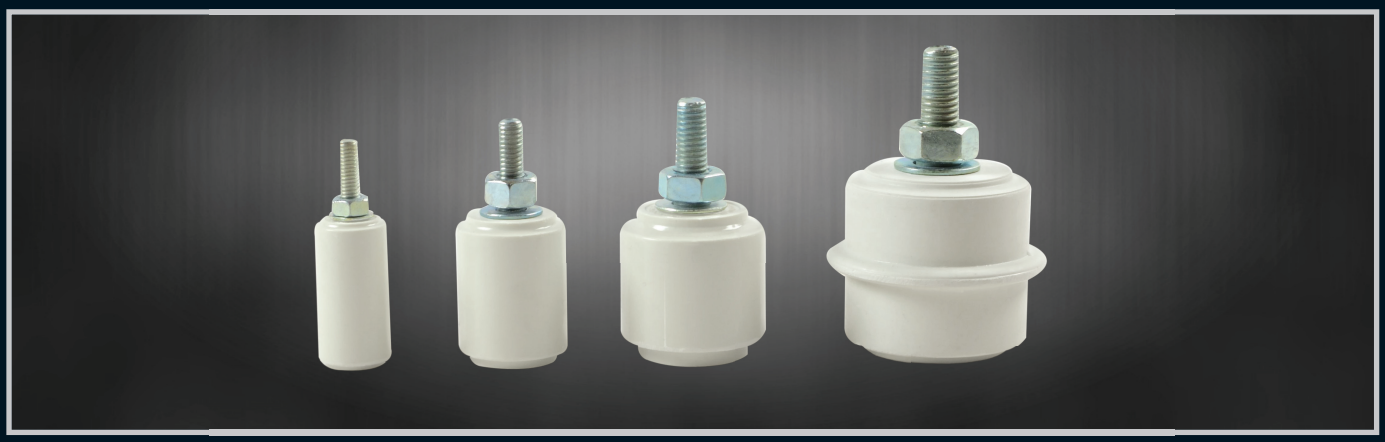

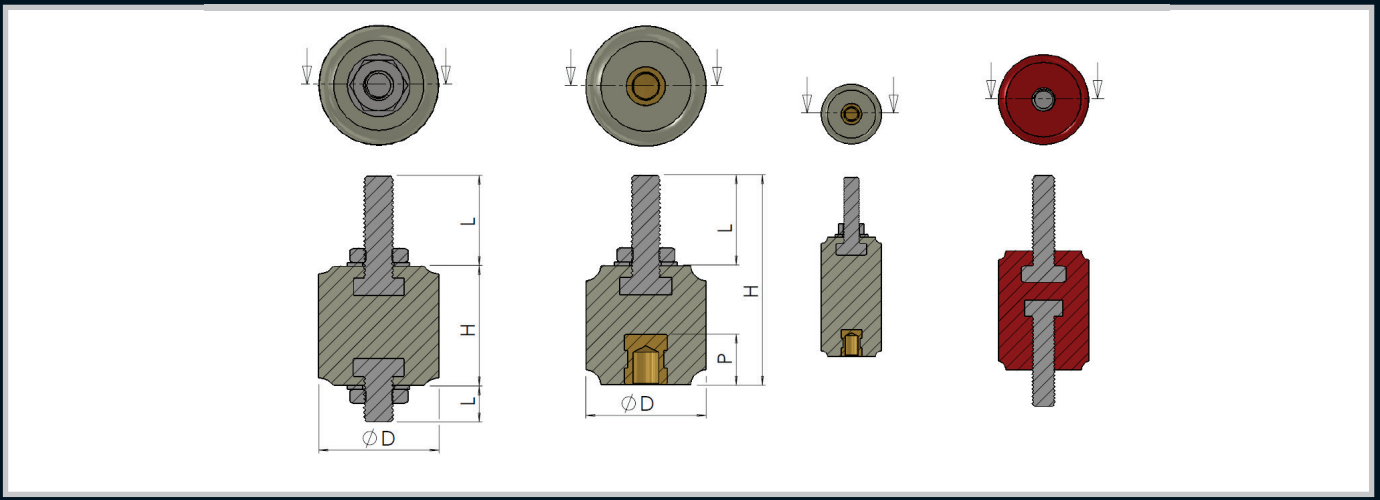

Part Number	Type	Thread Size (mm)	Recommended Torque (N.m)	H (mm)	D (mm)	P (mm)	L (mm)	Stud /Insert
050-315	SPL-6/BK	1	6	40	20	12	20	M6
050-314	SPL-6/BL	1	6	40	20	12	20	M6
050-313	SPL-6/R	1	6	40	20	12	20	M6
050-198	SPL-6/W	1	6	40	20	12	20	M6
050-318	SPL-8BK	1,25	10	40	30	15	25	M8
050-317	SPL-8/BL	1,25	10	40	30	15	25	M8
050-316	SPL-8/R	1,25	10	40	30	15	25	M8
050-199	SPL-8/W	1,25	10	40	30	15	25	M8
050-343	SPL-8 S/STEEL WHITE	1,25	10	40	30	15	25	M8
050-344	SPL-8 S/STEEL RED	1,25	10	40	30	15	25	M8
050-345	SPL-8S/STEEL BLUE	1,25	10	40	30	15	25	M8
050-346	SPL-8 S/STEEL BLACK	1,25	10	40	30	15	25	M8
050-321	SPL-10/BK	1,5	12	40	30	17	30	M10
050-320	SPL-10/BL	1,5	12	40	40	17	30	M10
050-319	SPL-10/R	1,5	12	40	40	17	30	M10
050-200	SPL-10/W	1,5	12	40	40	17	30	M10
050-295	SPL-10S/STEEL RED	1,5	12	40	40	17	30	M10
050-296	SPL-10S/STEEL BLUE	1,5	12	40	40	17	30	M10
050-297	SPL-10S/STEEL WHITE	1,5	12	40	40	17	30	M10
050-304	SPL-10S/STEEL BK	1,5	12	40	40	17	30	M10
050-324	SPL-12/BK	1,75	16	50	50/60	16	20/30	M12
050-323	SPL-12/BL	1,75	16	50	50/60	16	20/30	M12
050-322	SPL-12/R	1,75	16	50	50/60	16	20/30	M12
050-201	SPL-12/W	1,75	16	50	50/60	16	20/30	M12

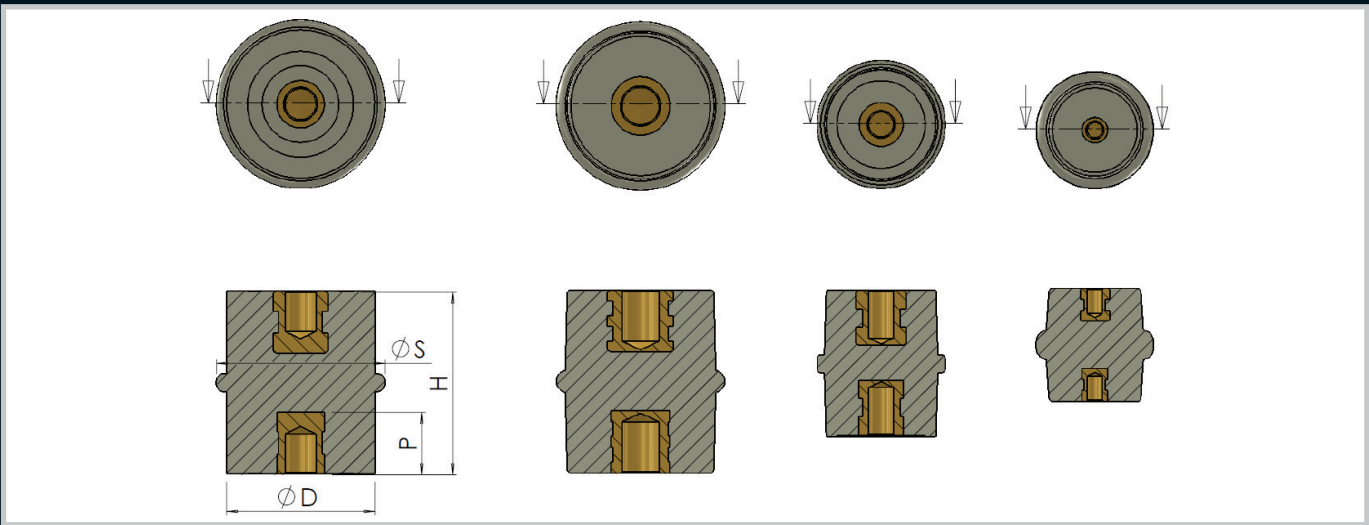

Part Number	Type	Thread Size (mm)	Recommended Torque (N.m)	Insert	H (mm)	D (mm)	Shed Diameter D (mm)	Stud Length L (mm)	Insert Depth P (mm)
050-099	CP-6/W	1	6	M6	31	25	30	-	11
050-190	CP-8/W	1,25	10	M8	41	30	35	-	13
050-191	CP-10/W	1,5	12	M10	50	40	45	-	12
050-305	CP-10/R	1,5	12	M10	50	40	45	-	12
050-325	CP-10/BK	1,5	12	M10	50	40	45	-	12
050-326	CP-10/BL	1,5	12	M10	50	40	45	-	12
050-194	CP-10/12	1,5 / 1,75	12 / 16	M10 / M12	50	45	45	-	16
050-192	CP-12/W	1,75	12	M12	60	45	60	-	16
050-195	CP-12/10	1,5 / 1,75	12 / 16	M10 / M12	60	45	60	-	15
050-193	CP-16/W	2	16	M16	60	45	60	-	20

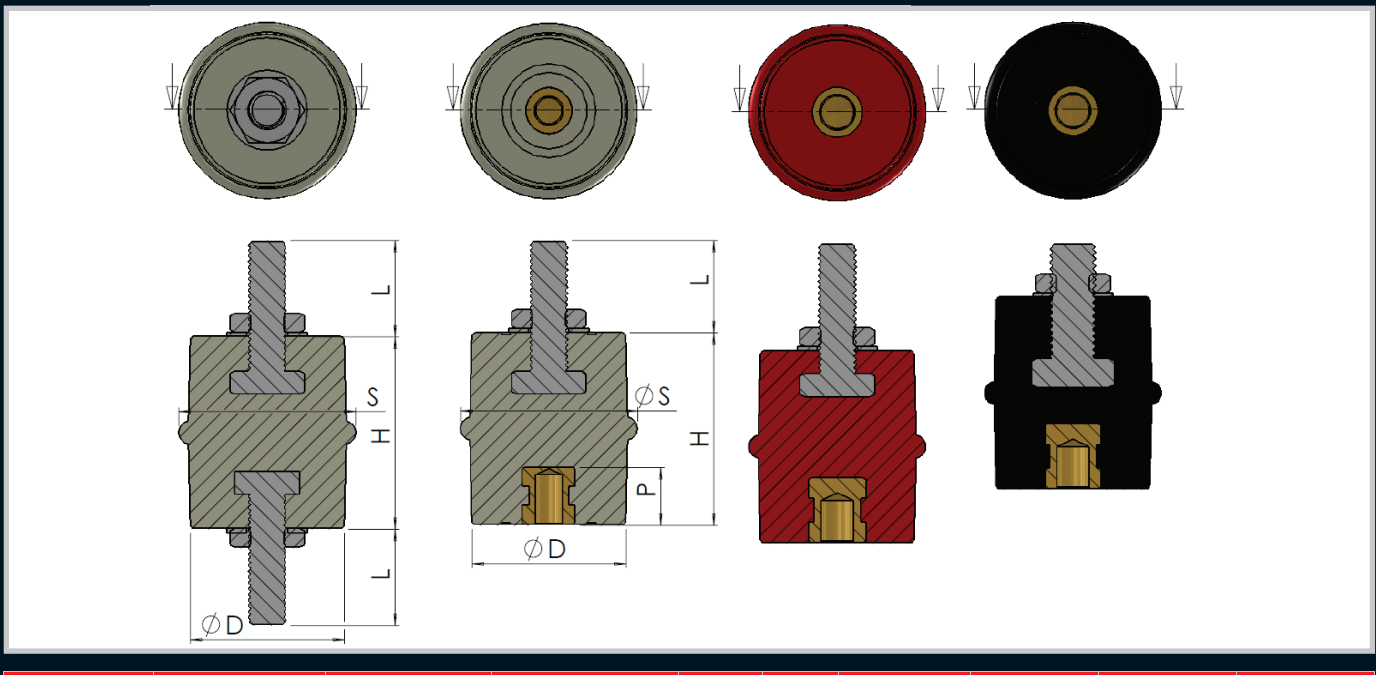

Part Number	Type	Thread	Recommended Torque (N.m)	H (mm)	D (mm)	Shed Diameter (mm)	Stud Length L (mm)	Insert Depth P (mm)	Stud/ Insert
050-197	CPL-10/W	1,5	12	50	40	45	25	15	M10
050-254	CPL-10 S/S BK	1,5	12	50	40	45	30	14	M10
050-252	CPL-10 S/S BL	1,5	12	50	40	45	30	14	M10
050-253	CPL-10 S/S R	1,5	12	50	40	45	30	12	M10
050-251	CPL-10 S/S W	1,5	12	50	40	45	30	12	M10

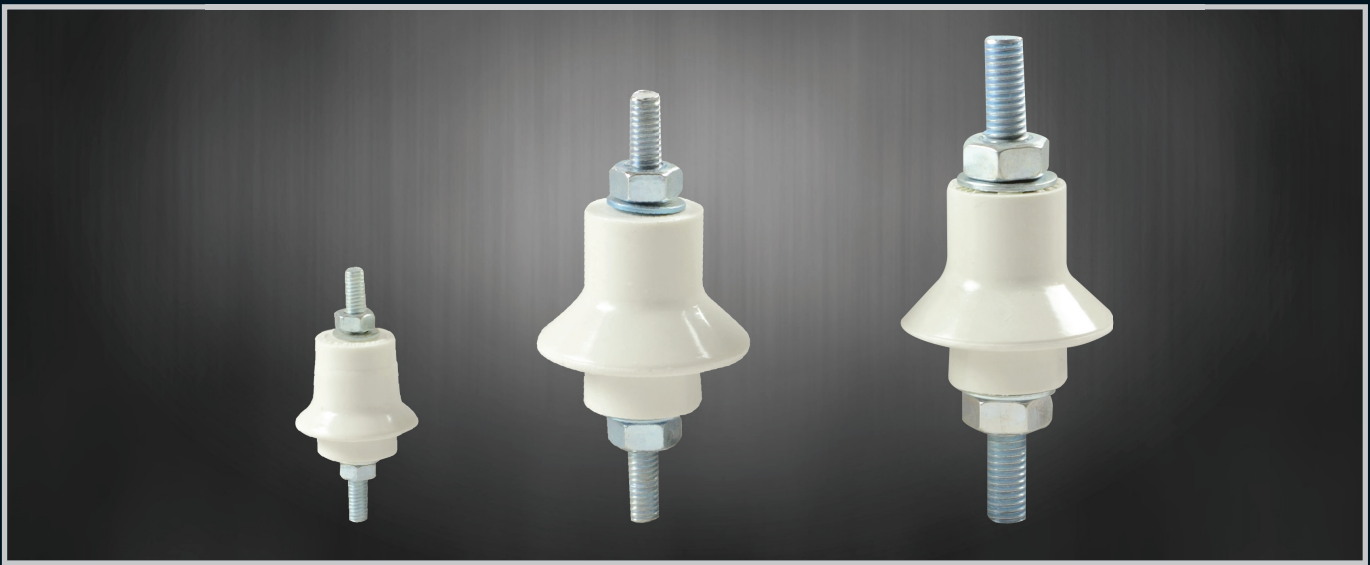

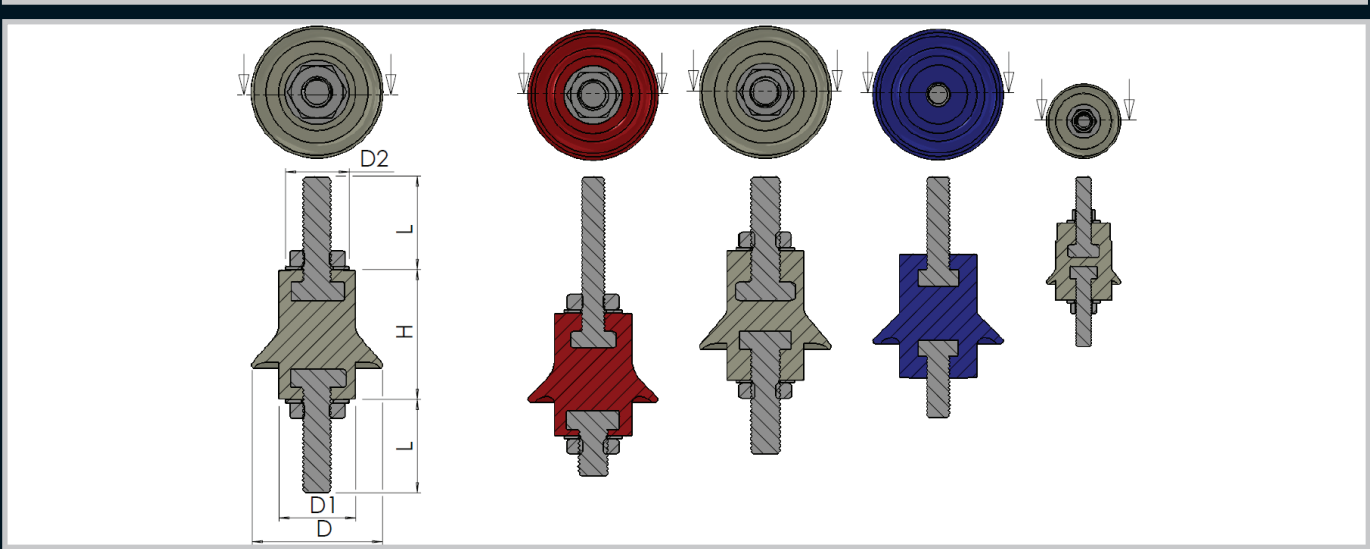

Part Number	Type	Thread Size (mm)	Recommended Torque (N.m)	H (mm)	D (mm)	L (mm)	D1 (mm)	D2 (mm)	Stud/ Insert
050-040	GL-5/BK	0,8	4	25	26	15	17	15	M5
050-039	GL-5/BL	0,8	4	25	26	15	17	15	M5
050-038	GL-5/R	0,8	4	25	26	15	17	15	M5
050-002	GL-5/W	0,8	4	25	26	15	17	15	M5
050-046	GL-8/BK	1,25	10	42	45	25	25	15	M8
050-045	GL-8/BL	1,25	10	42	45	25	25	15	M8
050-044	GL-8/R	1,25	10	42	45	25	25	15	M8
050-004	GL-8/W	1,25	10	42	45	25	25	15	M8
050-052	GL-10/BK	1,5	12	42	45	30	25	15	M10
050-051	GL-10/BL	1,5	12	42	45	30	25	15	M10
050-050	GL-10/R	1,5	12	42	45	30	25	15	M10
050-006	GL-10/W	1,5	12	42	45	30	25	15	M10

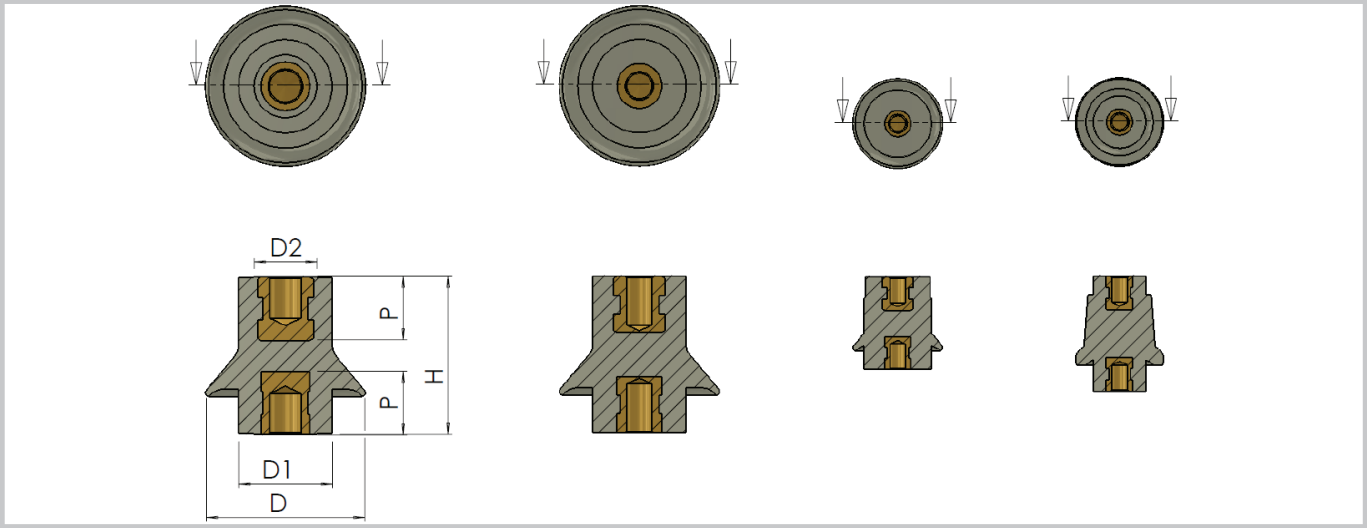

Part Number	Type	Thread Size (mm)	Recommended Torque (N.m)	H (mm)	D (mm)	P (mm)	L (mm)	D1 (mm)	D2 (mm)	Stud/ Insert
050-037	GP-5/BK	0,8	4	25	26	8	-	17	15	M5
050-036	GP-5/BL	0,8	4	25	26	8	-	17	15	M5
050-035	GP-5/R	0,8	4	25	26	8	-	17	15	M5
050-001	GP-5/W	0,8	4	25	26	8	-	17	15	M5
050-270	GP-5/RAISED BL	0,8	4	31	17	8	-	14	9	M5
050-271	GP-5/RAISED BK	0,8	4	31	17	8	-	14	9	M5
050-272	GP-5/RAISED R	0,8	4	31	17	8	-	14	9	M5
050-043	GP-8/BK	1,25	10	42	45	15	-	25	15	M8
050-042	GP-8/BL	1,25	10	42	45	15	-	25	15	M8
050-041	GP-8/R	1,25	10	42	45	15	-	25	15	M8
050-003	GP-8/W	1,25	10	42	45	15	-	25	15	M8
050-049	GP-10/BK	1,5	12	42	45	17	-	25	15	M10
050-048	GP-10/BL	1,5	12	42	45	17	-	25	15	M10
050-047	GP-10/R	1,5	12	42	45	17	-	25	15	M10
050-005	GP-10/W	1,5	12	42	45	17	-	25	15	M10

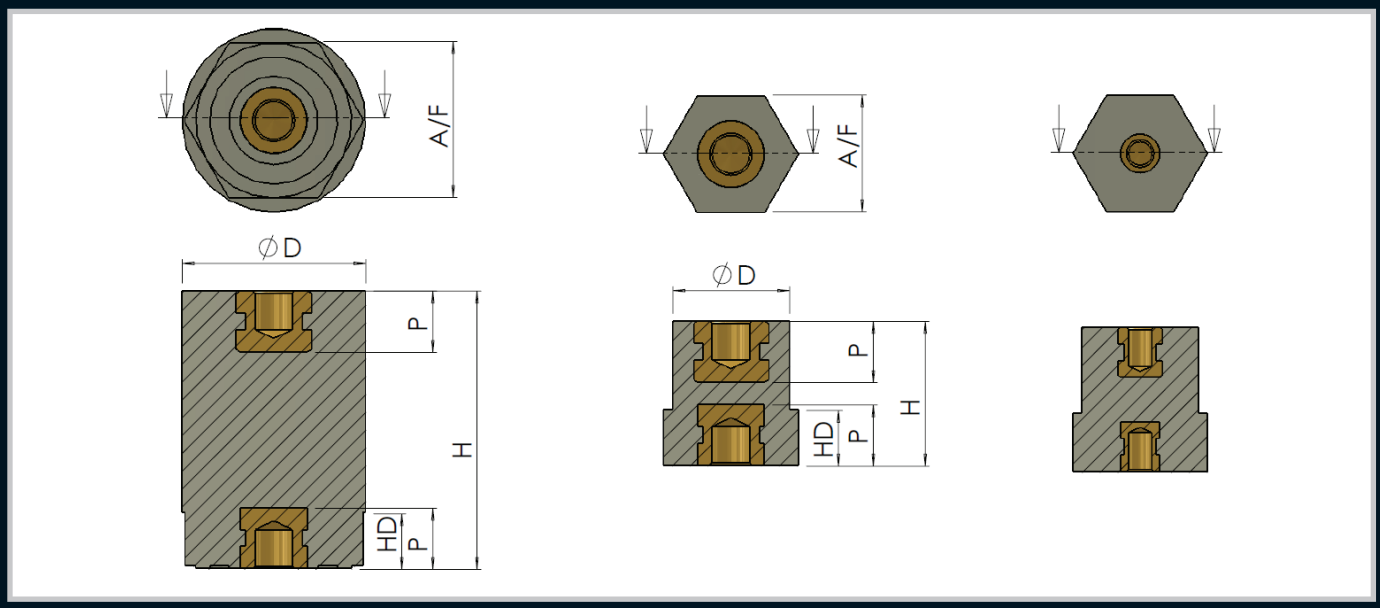

Part Number	Type	Thread Size (mm)	Recommended Torque (N.m)	H (mm)	D (mm)	Hex Depth HD (mm)	Insert Depth P (mm)	Across Flats (mm)	Stud/ Insert
050-030	HP-8/W	1,25	10	50	33	10	9	28	M8
050-170	HP-6/8/W	1	6	25	33	10	9	28	M6/M8
050-166	HP-6/8/R	1	6	25	33	10	9	28	M8/M8
050-165	HP-6/8/W	1	6	25	33	10	9	28	M8/M8
050-093	HP-6	1	6	26	20	10	9	21	M6
050-275	HP-6 BK	1	6	26	20	10	9	21	M6

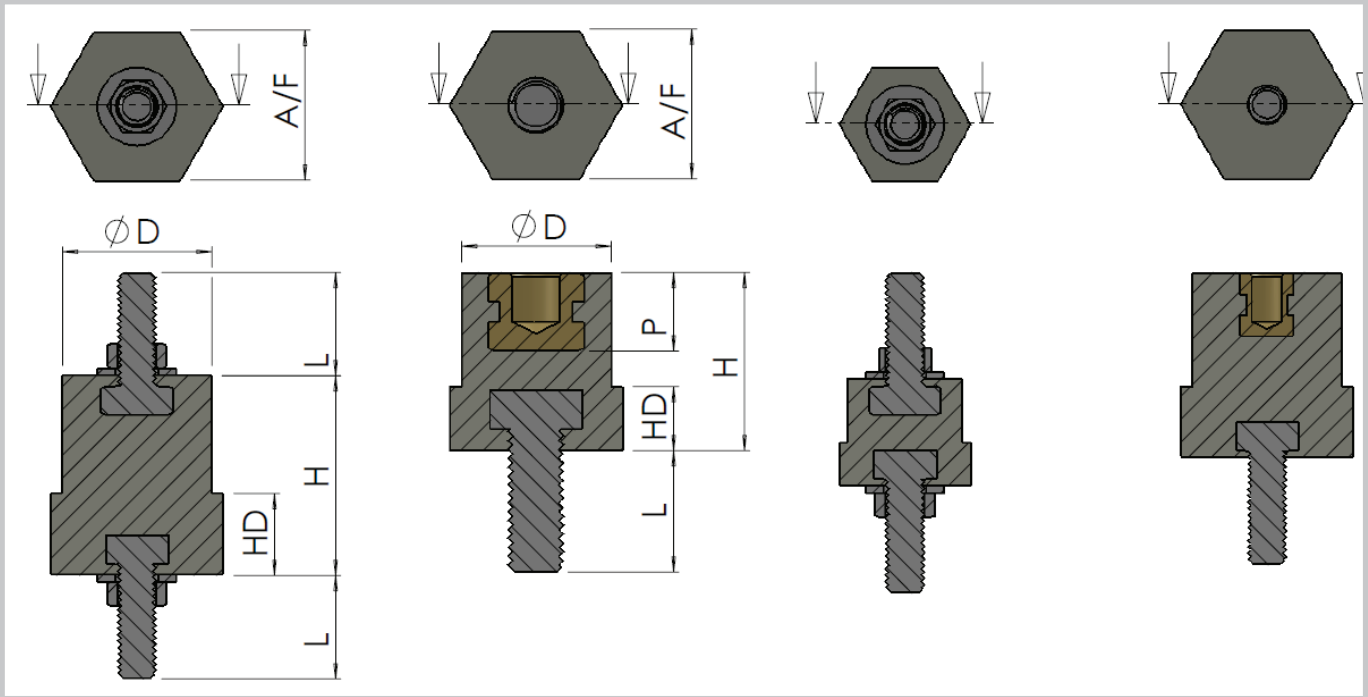

Part Number	Type	Thread Size (mm)	Recommended Torque (N.m)	H (mm)	D (mm)	Hex Depth HD (mm)	Stud Length L (mm)	Insert Depth P (mm)	Across Flats (mm)	Stud/ Insert
050-095	HPL-6W	1	6	20	20	10	15	10	21	M6
050-098	HPL-6/8	1/ 1,25	6 / 10	25	20	10	17	11	21	M8 / M8
050-092	HL-5	0,8	4	15	15	6	15	-	16	M5
050-094	HL-6W	1	6	28	20	6	15	-	21	M6

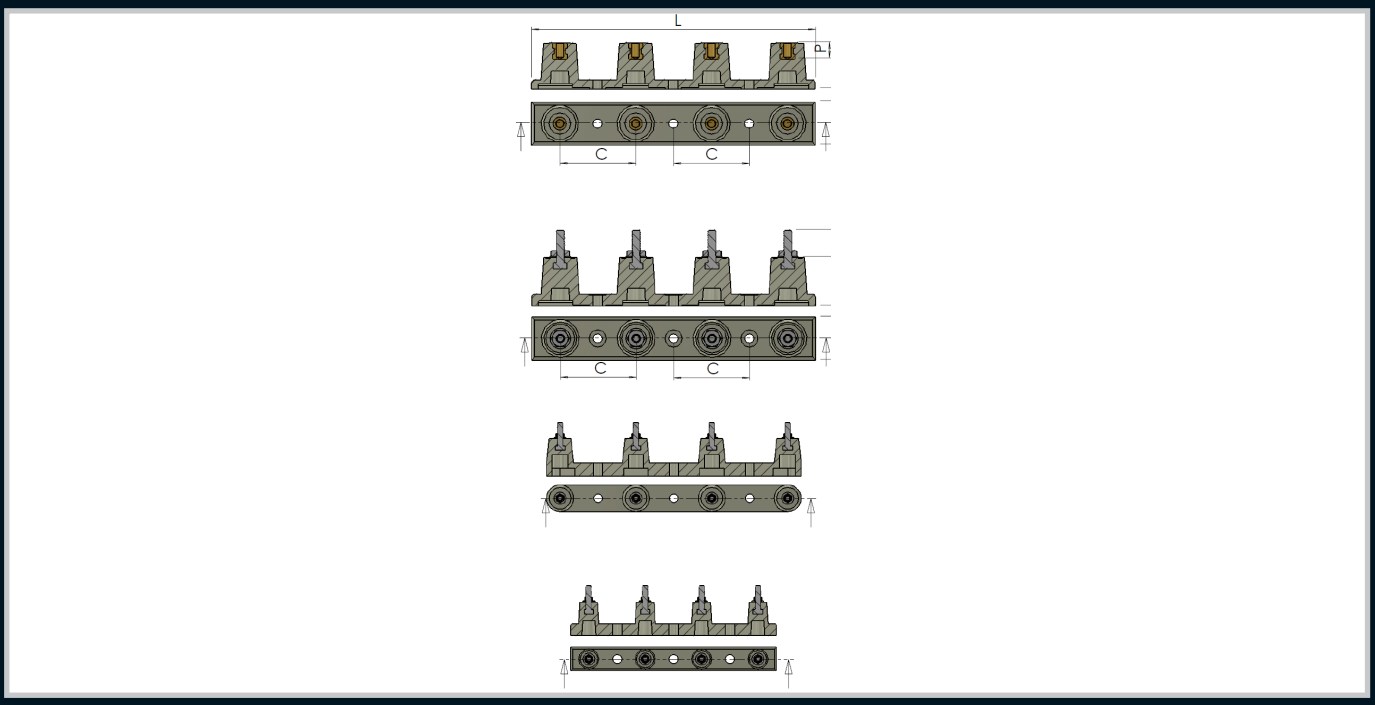

Part Number	Type	Thread Size (mm)	Recommended Torque (N.m)	L (mm)	C (mm)	W (mm)	H (mm)	Stud Length (mm)	Insert Depth P (mm)	Stud/ Insert	Hole Diameter (mm)
050-020	IL-6/2	1	6	235	70	25	34	16	-	M6	8
050-021	IL-8	1,25	10	262	70	40	40	25	-	M8	8
050-019	IL-6	1	6	190	52	22	30	15	-	M6	8

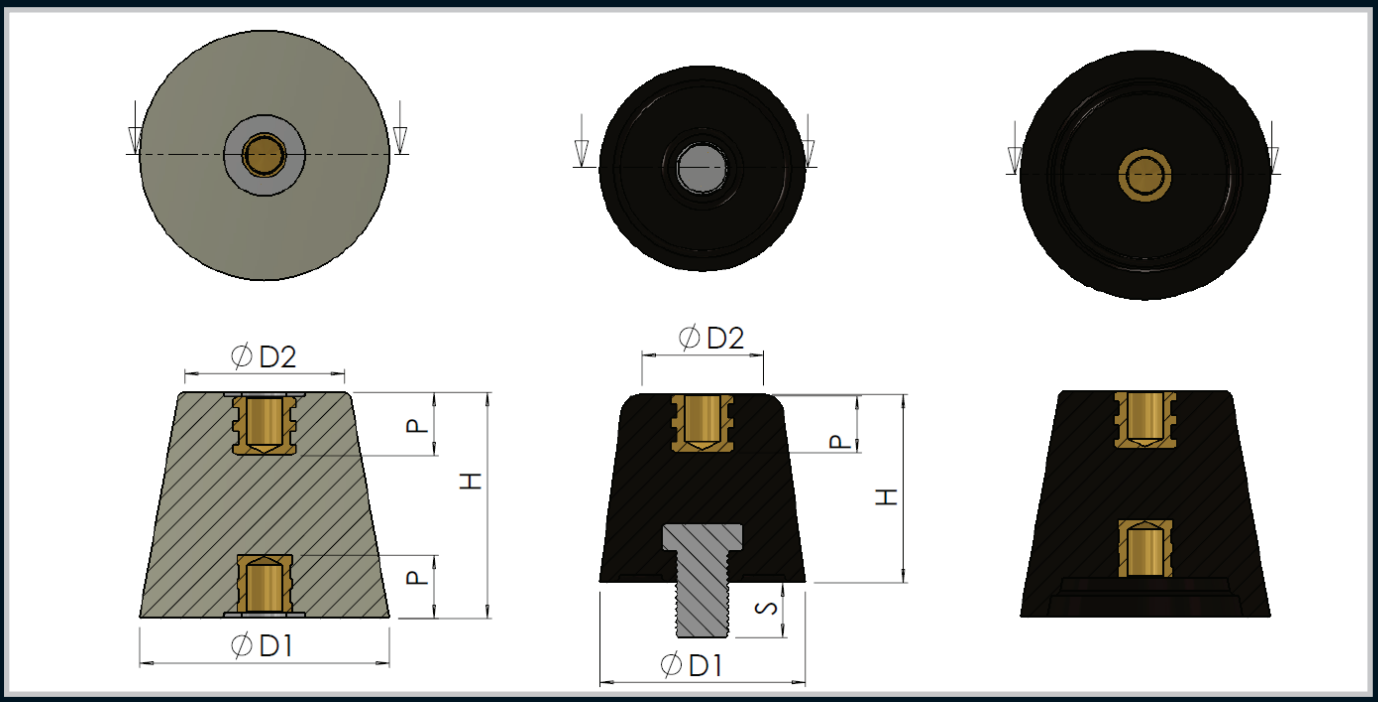

Part Number	Type	Thread Size (mm)	Recommended Torque (N.m)	H (mm)	D1 (mm)	D2 (mm)	Stud Length L (mm)	Insert Depth P (mm)	Stud/ Insert
050-022	SM-1000	1,75	16	55	60	42	12	12	M12
050-023	SM-2000	1,75	16	60	72	50	-	12	M12
050-024	SM-2000 M12	1,75	16	60	72	50	-	16	M12

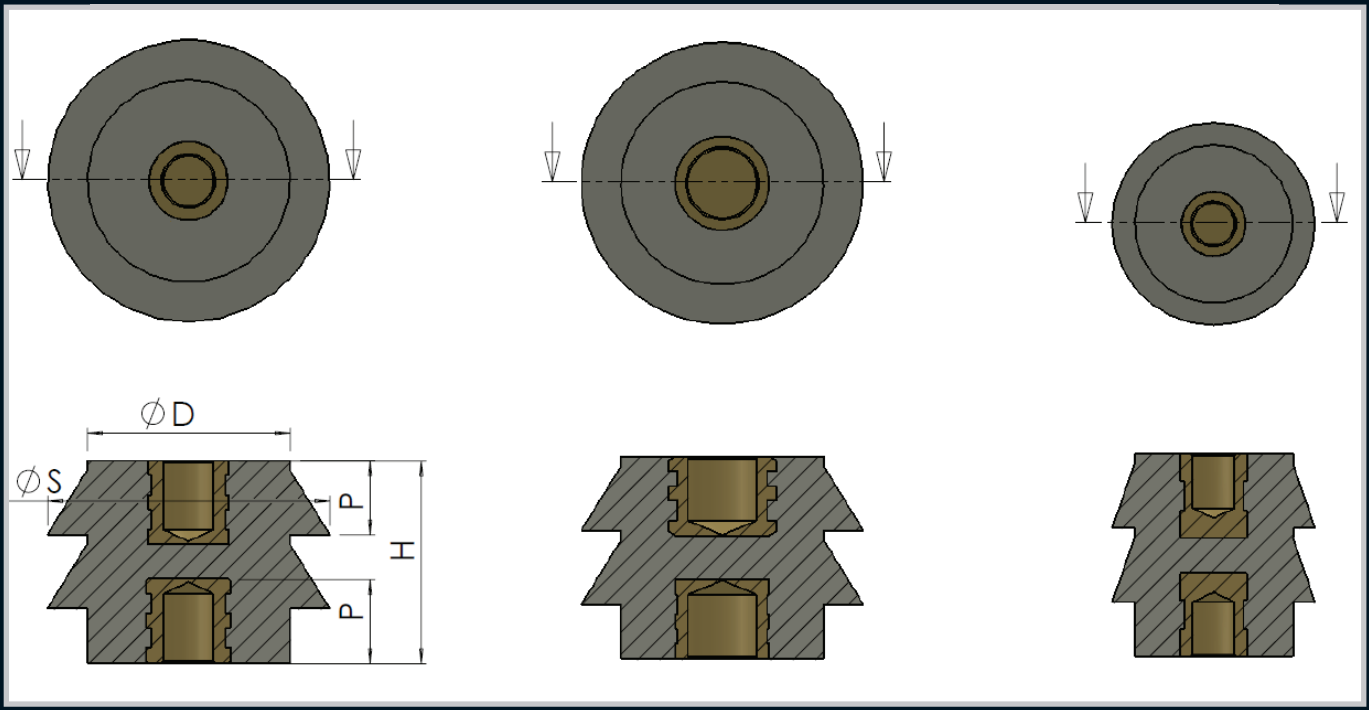

Part Number	Type	Thread Size (mm)	Recommended Torque (N.m)	H (mm)	D (mm)	Shed Diameter S (mm)	Insert Depth P (mm)	Stud/Insert
050-202	WP-10	1,5	12	41	32	41	12	M10
050-203	WP-12/10	1,5 / 1,75	12 / 16	41	41	57	16/12	M10 / M12
050-205	WP-12/10/20	1,75 / 1,5 / 2	16 / 12 / 16	41	41	57	16 / 16 / 22	M10 / M12 / M20

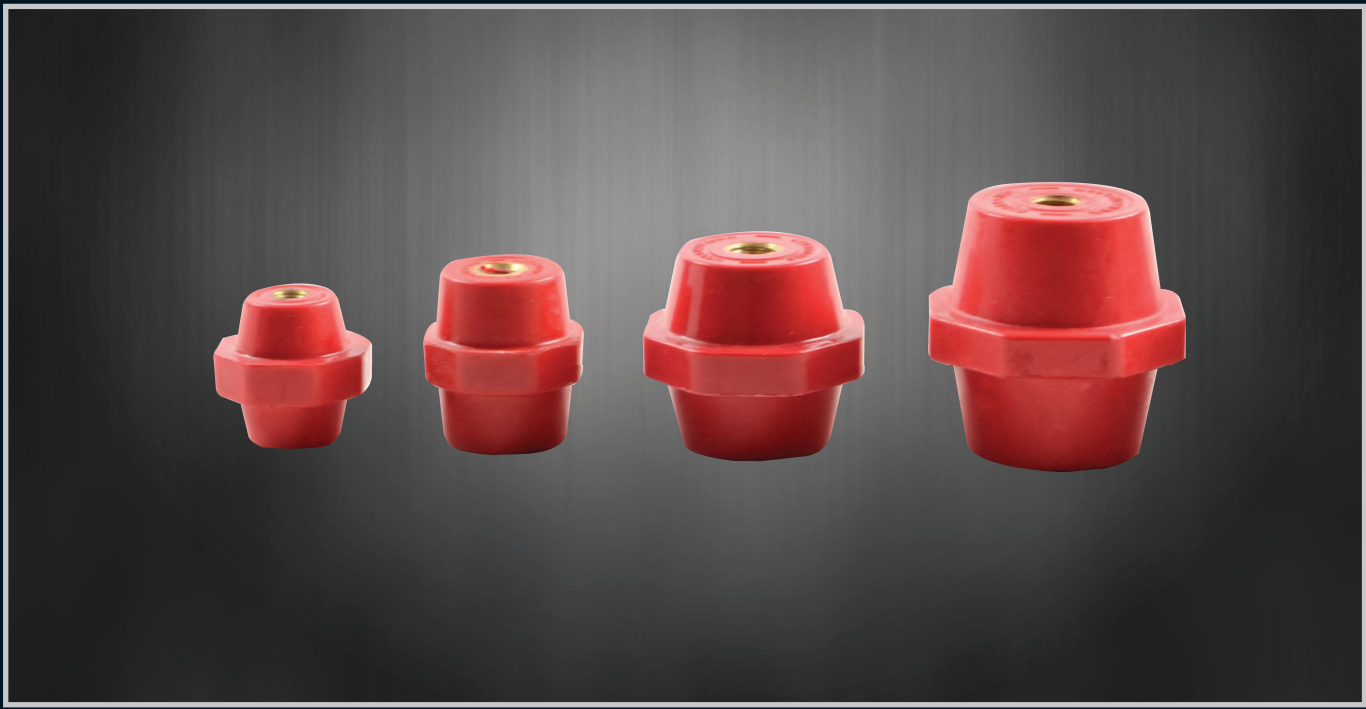

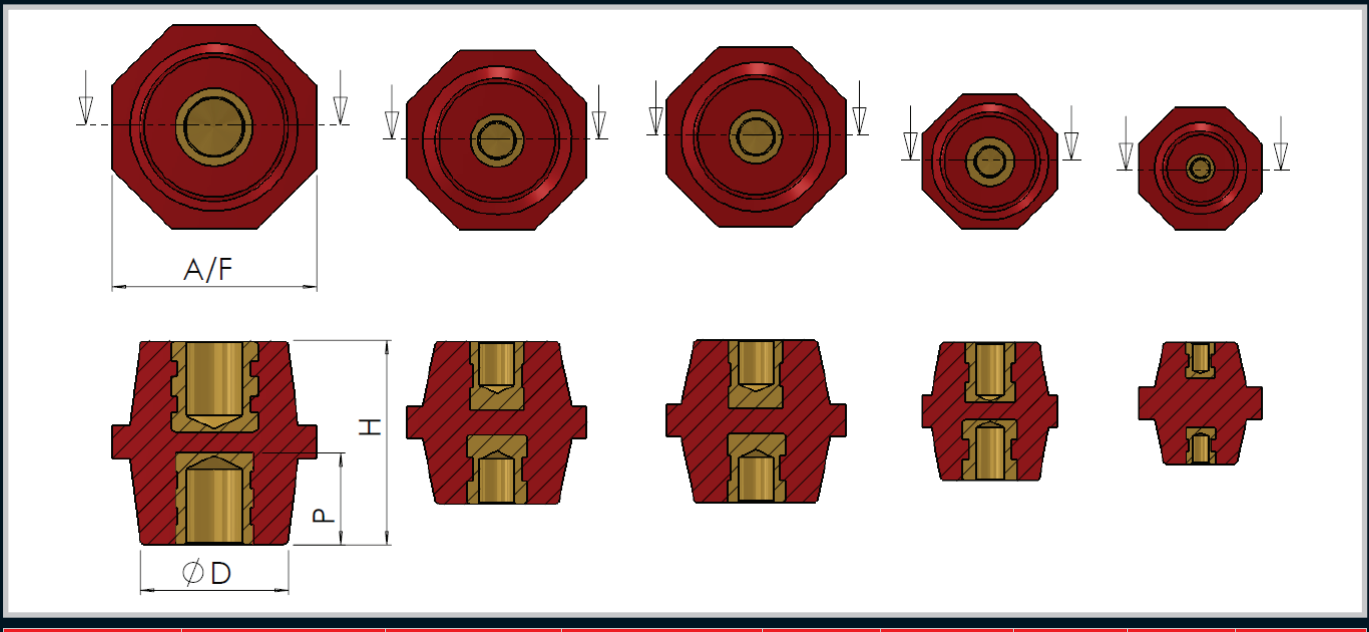

Part Number	Type	Thread Size (mm)	Recommended Torque (N.m)	H (mm)	D (mm)	Across Flats (mm)	Insert Depth P (mm)	Stud/ Insert
050-337	OP-6R	1	6	30	20	30	9	M6
050-242	OP-8R	1,25	10	35	25	32	11	M8
050-370	OP-8/10	1,25 / 1,5	10/12	35	25	32	15	M8 / M10
050-359	OP-8/40	1,25	10	40	26	30	10	M8
050-243	OP-10R	1,5	12	40	30	44	12	M10
050-244	OP-12R	1,5	16	50	35	50	16	M12
050-349	OP-12/8	1,25 / 1,75	10 / 16	50	35	50	15	M8 / M12
050-245	OP-12/10	1,5 / 1,75	12 / 16	50	35	50	12	M10 / M12
050-360	OP-13/8	1,25	10	51	29	36	9.5	M8
050-361	OP-13/10	1,5	12	51	28/29	36	11	M10
050-362	OP-14/8	1,25	10	76	35	50	9.5	M8
050-363	OP-14/10	1,5	12	76	35	50	11	M10

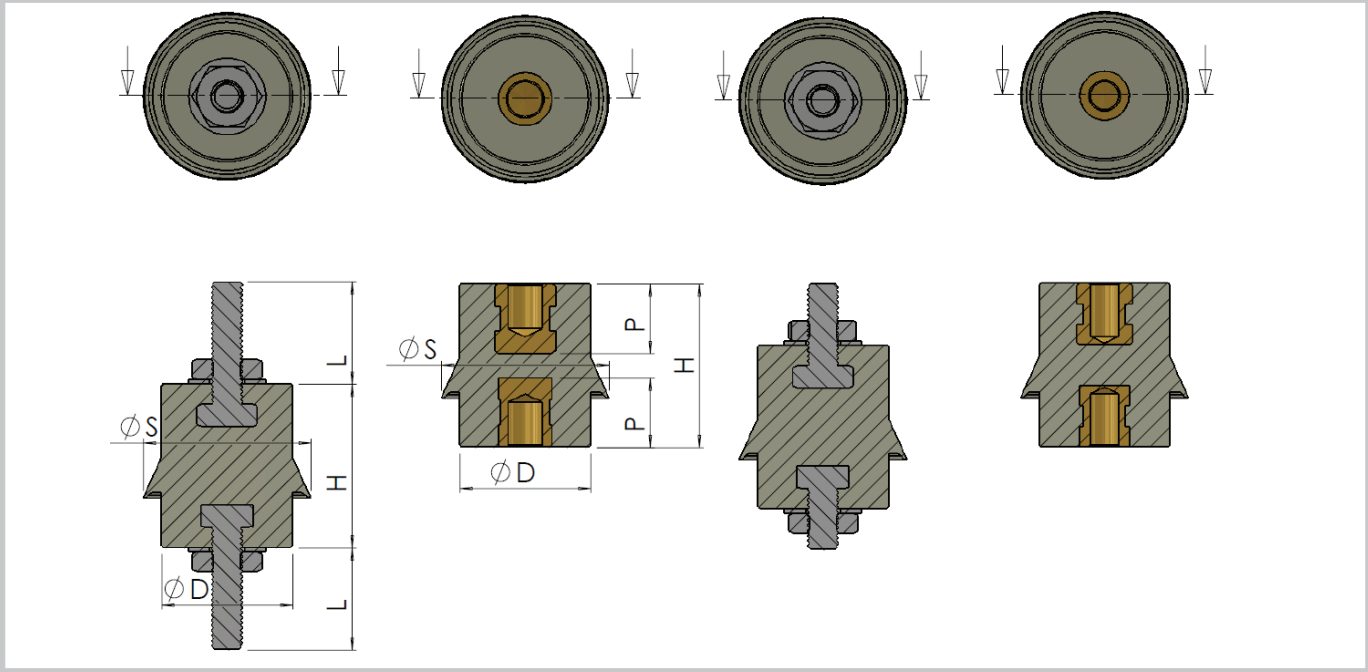

Part Number	Type	Thread Size (mm)	Recommended Torque (N.m)	H (mm)	D (mm)	Shed Diameter (mm)	Stud Length L (mm)	Insert Depth P (mm)	Stud/ Insert
050-028	VP-8/W	1,25	10	40	30	41	-	11	M8
050-077	VP-8/R	1,25	10	40	30	41	-	11	M8
050-078	VP-8/BL	1,25	10	40	30	41	-	11	M8
050-079	VP-8/BK	1,25	10	40	30	41	-	11	M8
050-029	VL-8/W	1,25	10	40	30	41	25	-	M8
050-080	VL-8/R	1,25	10	40	30	41	25	-	M8
050-081	VL-8/BL	1,25	10	40	30	41	25	-	M8
050-082	VL-8/BK	1,25	10	40	30	41	25	-	M8
050-224	VP-10/W	1,5	12	40	30	41	-	16	M10

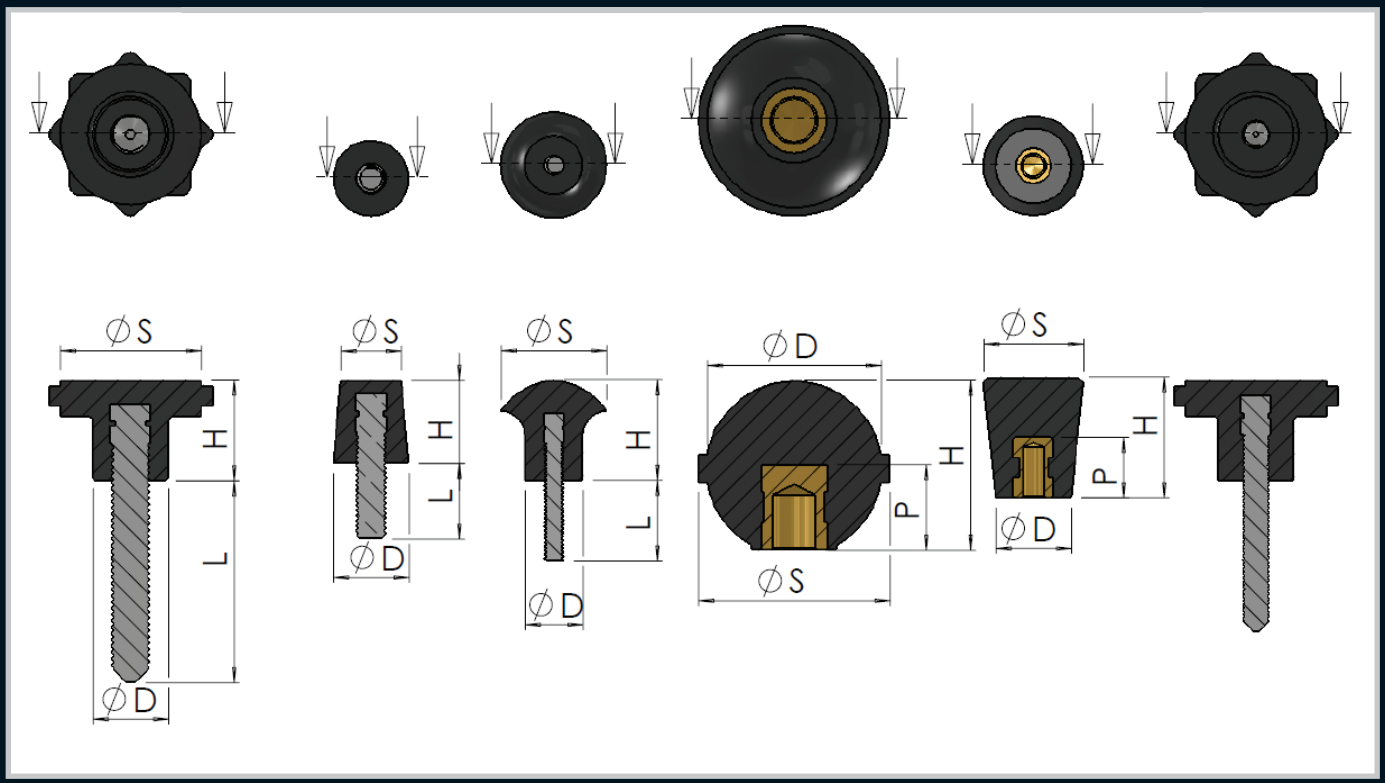

Part Number	Type	Thead Size (mm)	Recommended Torque (N.m)	H (mm)	D (mm)	Shed Diameter S (mm)	Stud Length L (mm)	Insert depth P (mm)	Stud/ Insert
020-329	K4	0,7	3	18	12/20	22	15	10	M4
050-239	K6 x 30	1	6	20	15	28	30	-	M6
050-232	K8 x 40	1,25	10	20	15	28	40	-	M8
050-301	K8 x 50	1,25	10	20	15	28	50	-	M8
050-311	K6	1	6	24	15	20	-	12	M6
050-249	K10	1,5	12	34	34	38	-	17	M10

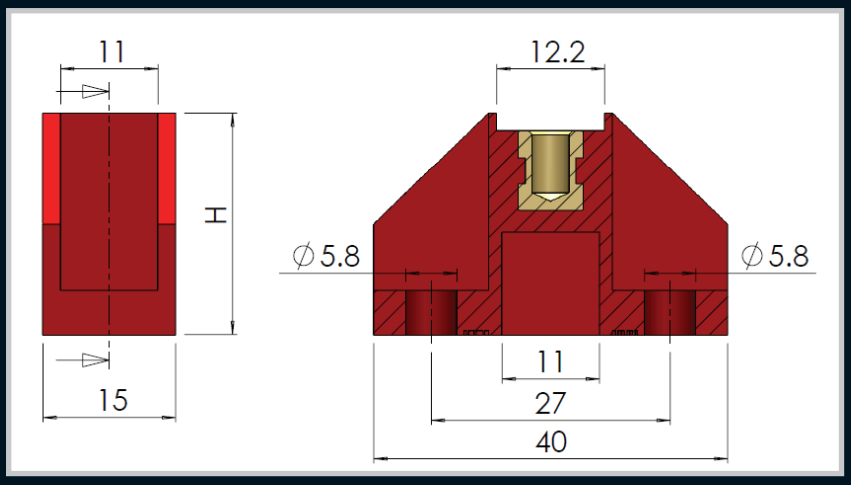

Part Number	Description	Stud/ Insert	Thread Size (mm)	Recommended Torque (N.m)
050-354	Red Stepped Insulator	M6	1	6

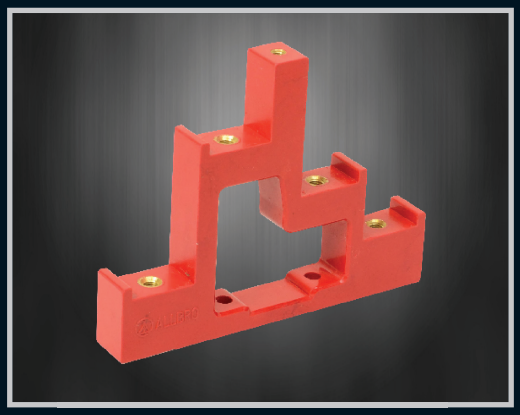

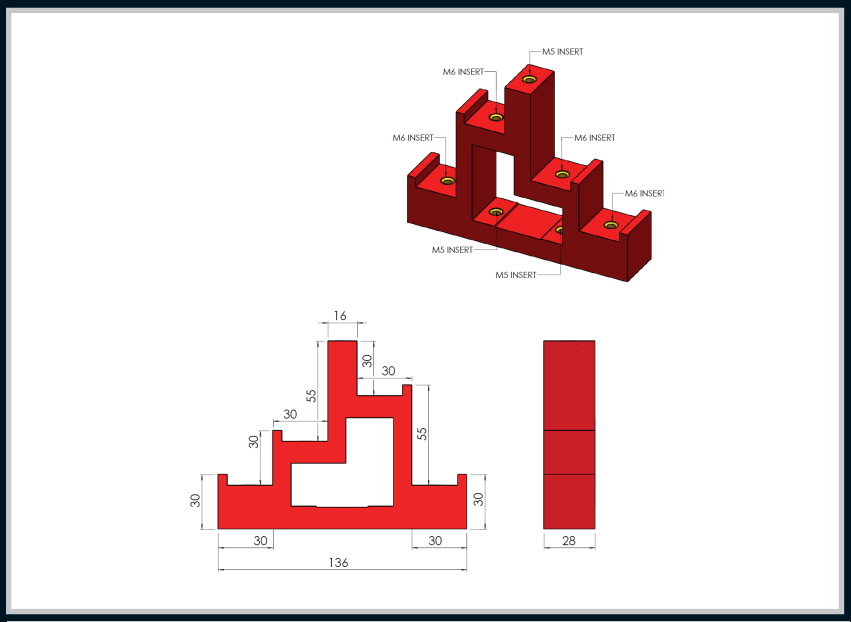

Part Number	Description	Stud/ Insert	Thread Size (mm)	Recommended Torque (N.m)
050-172	Red Stepped Insulator	M5 / M6	0,8 / 1	4 / 6

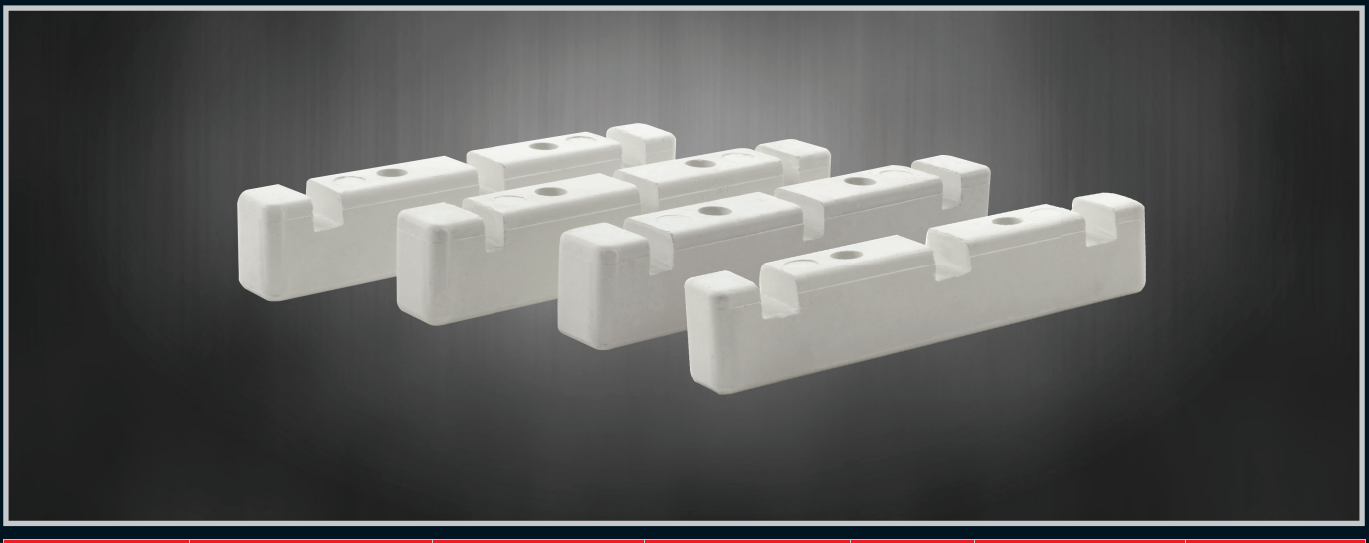

Part Number	Description	No. of Slots / Phase	Size of Slots (mm)	Clamp Holes	Distance between holes (mm)	Hole Diameter (mm)
050-026	3 CEN 7	1	7	2	71	7,6
050-233	3 CEN RAISED 7	1	7	2	71	7,6
050-229	3 CEN 10	1	10	2	71	7,6
050-234	3 CEN RAISED 10	1	10	2	71	7,6
050-230	3 CEN 12	1	12	2	71	7,6
050-235	3 CEN RAISED 12	1	12	2	71	7,6
050-231	3 CEN 14	1	14	2	71	7,6
050-236	3 CEN RAISED 14	1	14	2	71	7,6

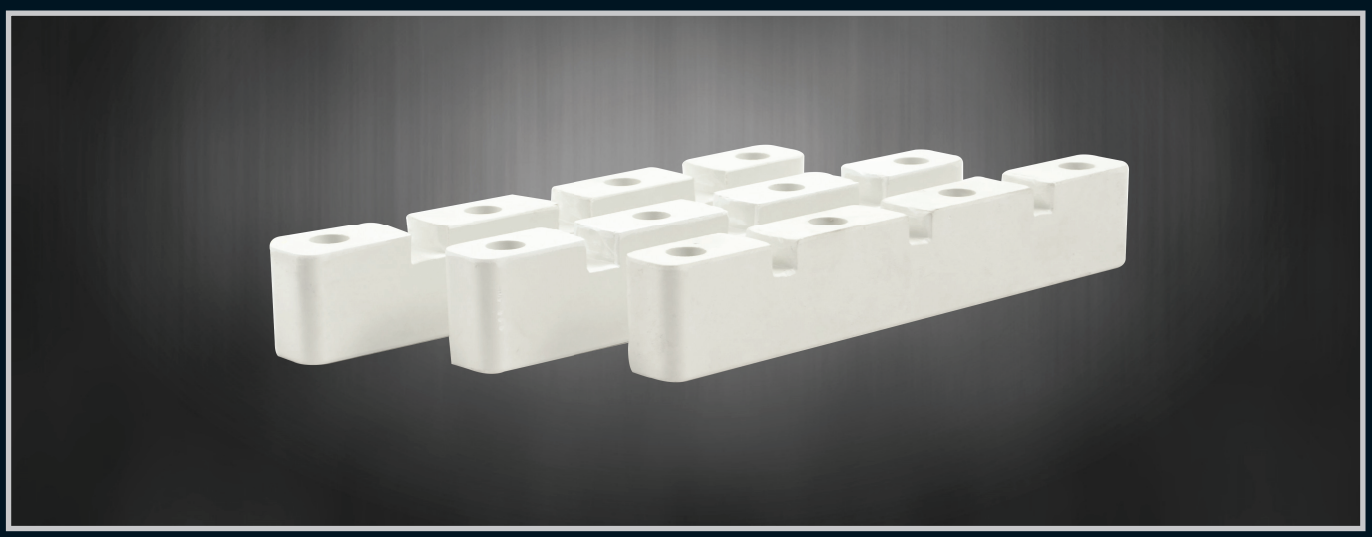

Part Number	Description	No. of slots / Phase	Size of Slots (mm)	Clamp Holes	Distance between Holes (mm)	Hole Diameter (mm)
070-049	B/B Supp DRG 441303 A	1	9	2	63,5	8
070-053	B/B Supp DRG 41302 A	1	7	2	63,5	8
070-054	B/B Supp DRG A 441304 REV 2	3	6,5	4	63,5	8
070-055	B/B Supp DRG A 441305 REV 2	3	9	4	63,5	8

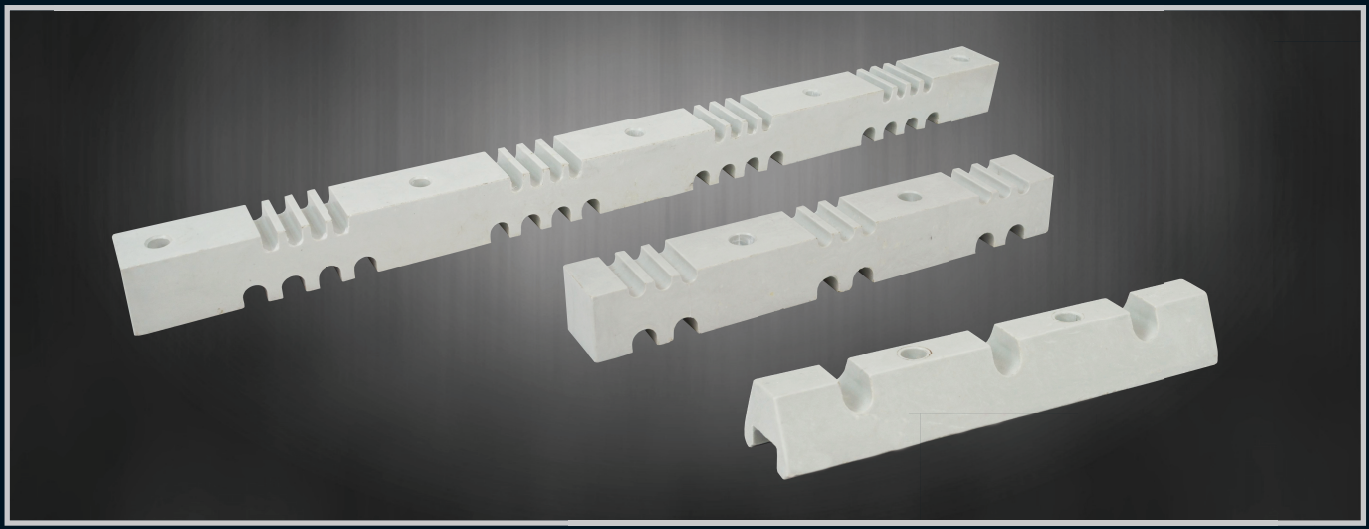

Part Number	Description	No. of Slots / Phase	Size of Slots (mm)	Clamp Holes	Distance between Holes (mm)	Hole Diameter (mm)
050-367	AL180/7mm	3	7	2	65	7,3
050-364	AL180/11mm	3	11	2	65	7,3
050-365	AL270	6 and 9	12.6 and 8	2	100	12,5
050-366	AL600	16 and 16	12.5 and 8	5	140	10,8

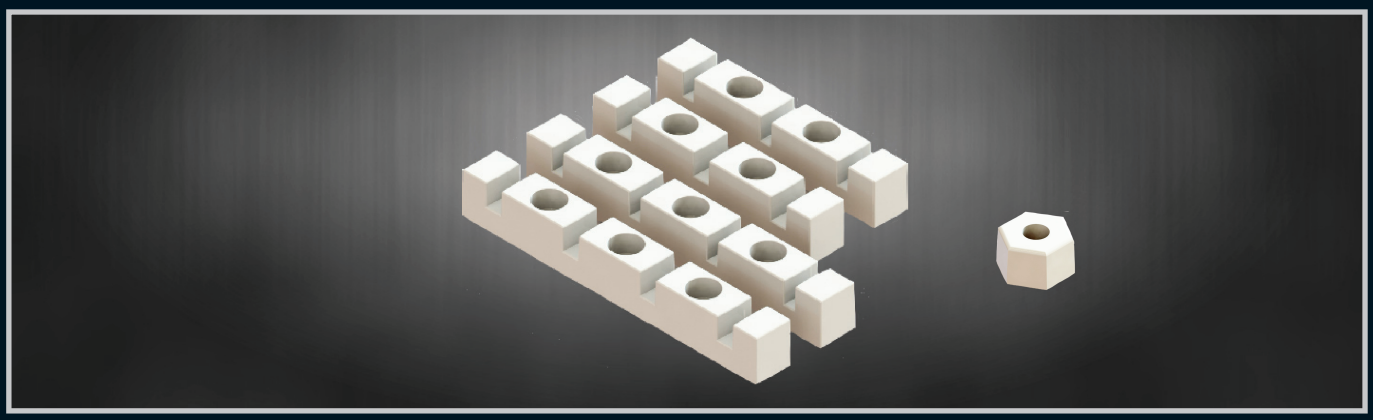

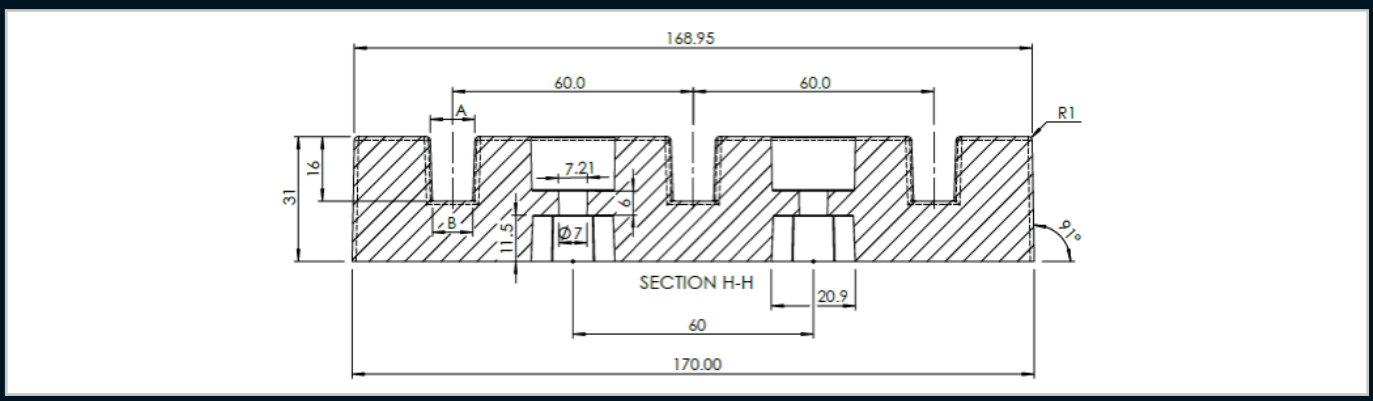

Part Number	Description	A (mm)	B (mm)
AB3-6.35	3 Way Busbar Support	7.4	6.35
AB3-10	3 Way Busbar Support	11.08	10
AB4-6.35	4 Way Busbar Support	7.4	6.35
AB4-10	4 Way Busbar Support	11.08	10