4

Handles

ALLBRO

1010041 - 1010045
Pg.141

1010051 - 1010055
Pg.141

1010061
Pg.141

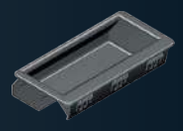
9401
Pg.142

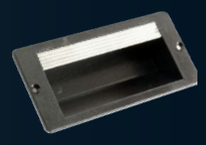
1010120
Pg.142

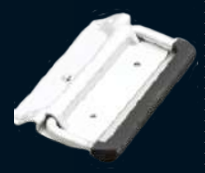
56.116.S/H
Pg.142

16.150.46.B
Pg.143

22.3.19.K/C
Pg.144

27.3.45.K/D/C.C
Pg.144

22.3.105.25.P.P/K
Pg.144

22.3.23.94.K/D/C
Pg.145

22.3.31.100.K/C
Pg.145

22.3.36.105
Pg.145

12.L115S/92268
Pg.146

22.L115S/92268
Pg.146

12.L115SP/AC
Pg.146

22.L115SP/AC
Pg.147

22.L115/92268/CAM
Pg.147

22.3.31.58.K/C
Pg.148

22.3.37.78
Pg.148

22.T60/92268/CAM
Pg.148

12.T60S/92268
Pg.149

22.T.60S/92268
Pg.149

12.T.100S/CL001
Pg.149

100.1.58.C/K
Pg.150

96.1.15/92268
Pg.150

115.1.105/92268
Pg.150

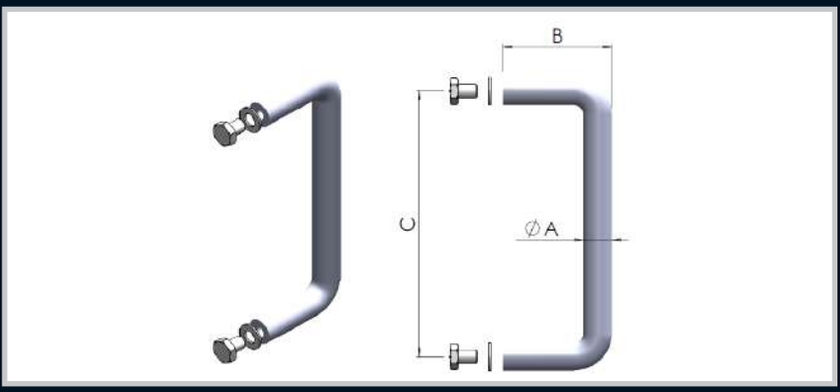

Part number	Description	A	B	C	Washer	Screw
1010041	Chrome Plated	6	30	50	M4	M4 X 10
1010042	Chrome Plated	6	30	75	M4	M4 X 10
1010142-8	Chrome Plated	8	30	75	M4	M4 X 10
1010043	Chrome Plated	10	40	100	M5	M5 X 12
1010044	Chrome Plated	12	46	115	M6	M5 X 12
1010045	Chrome Plated	12	60	200	M6	M5 X 12

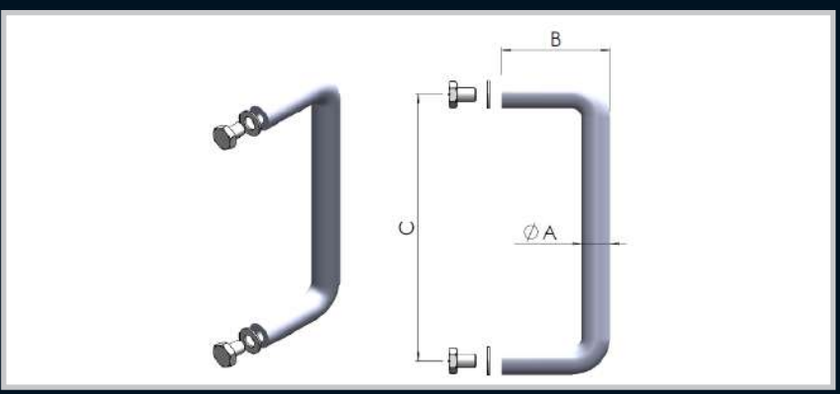

Part number	Description	A	B	C	Washer	Screw
1010051	Black Powder Coated	6	30	50	M4	M4 X 10
1010052	Black Powder Coated	6	30	75	M4	M4 X 10
1010053	Black Powder Coated	10	40	100	M5	M5 X 12
1010054	Black Powder Coated	12	46	115	M6	M6 X 12
1010055	Black Powder Coated	12	60	200	M6	M5 X 12

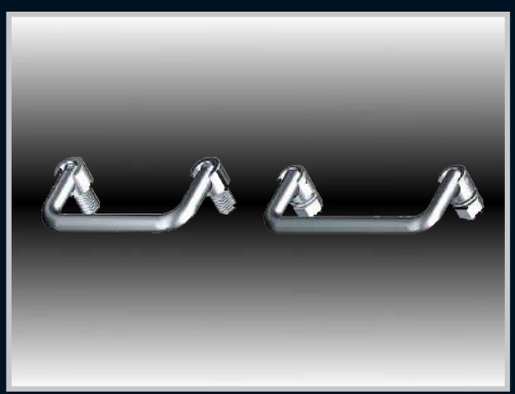

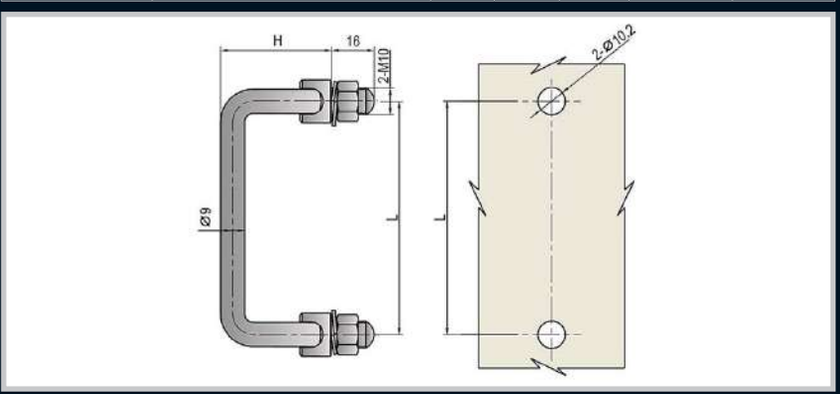

Part Number Chrome	Part Number Stainless Steel	L (mm)	H (41.5)	H (51.5)
1010061	1010071	87	141	151
1010062	1010072	100	241	251
1010063	1010073	120	341	351
1010064	1010074	135	441	451
1010065	1010075	150	541	551

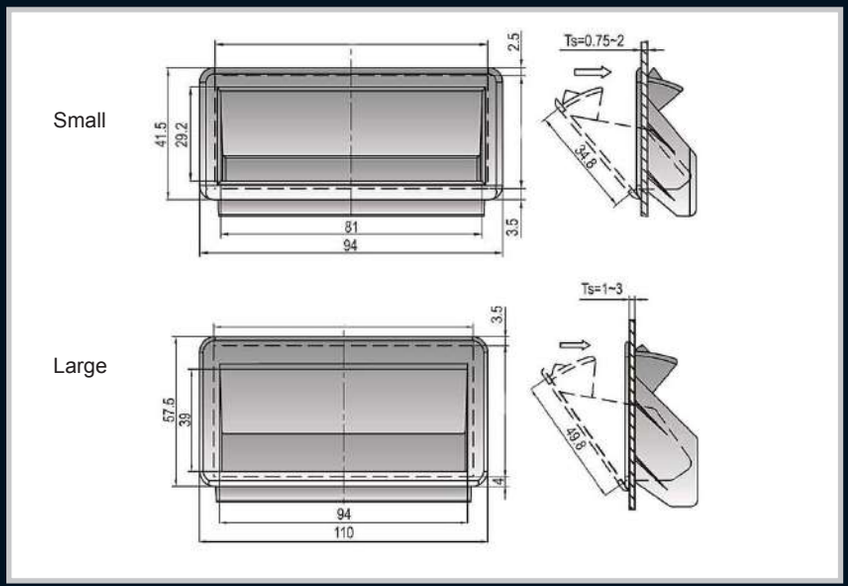

Part Number	Description
9401	Small
11002	Large

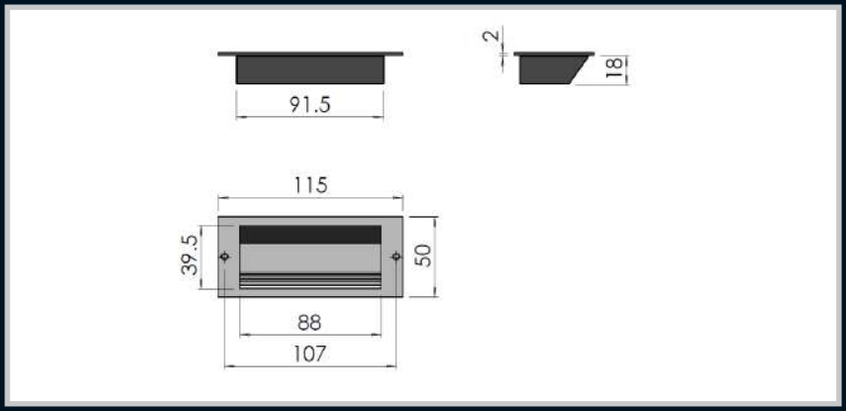

Part Number	Description
1010120	Black plastic with aluminium strip

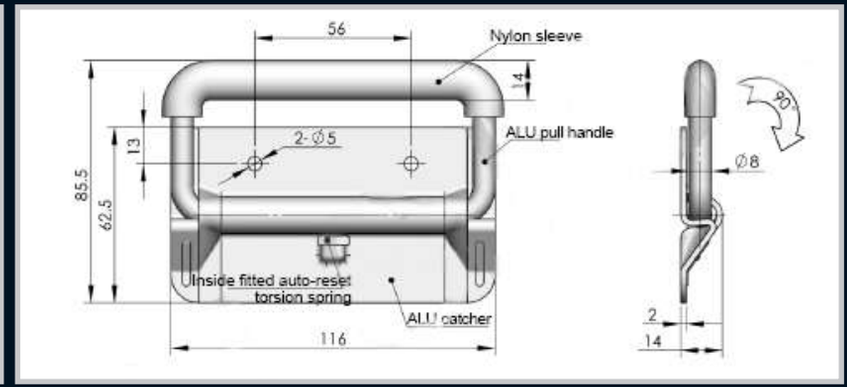

Part Number	Description
56.116.S/H	Spring loaded flush grab handle

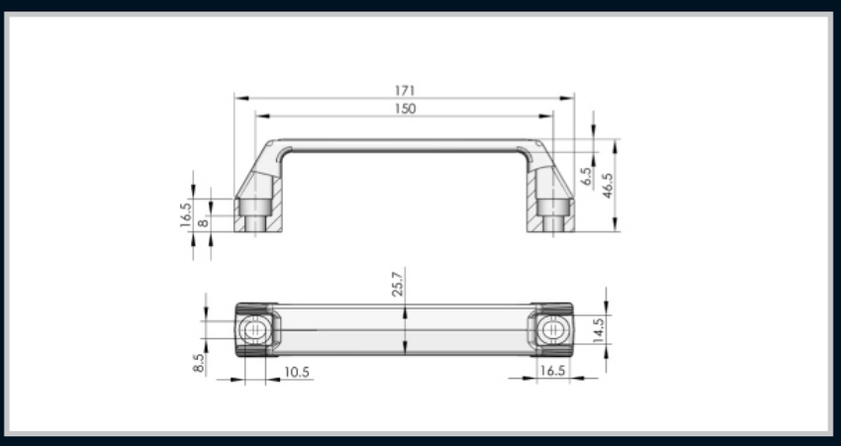

Part Number	Description
16.150.46.B	Large plastic grab handle

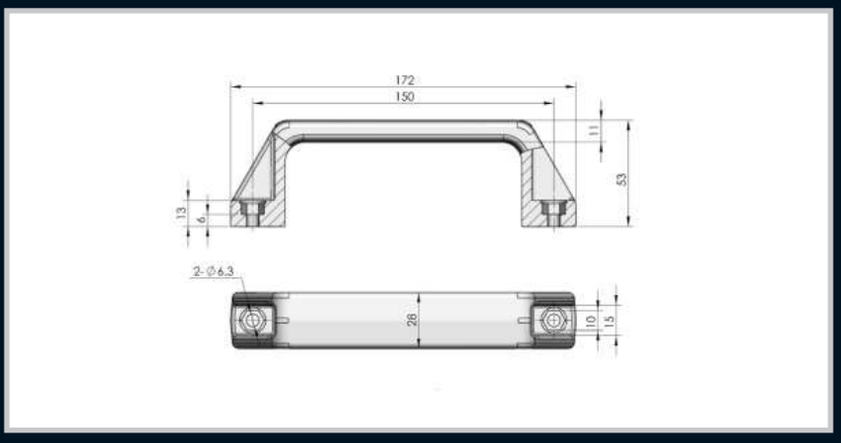

Part Number	Description
13.150.53.B	Medium plastic grab handle

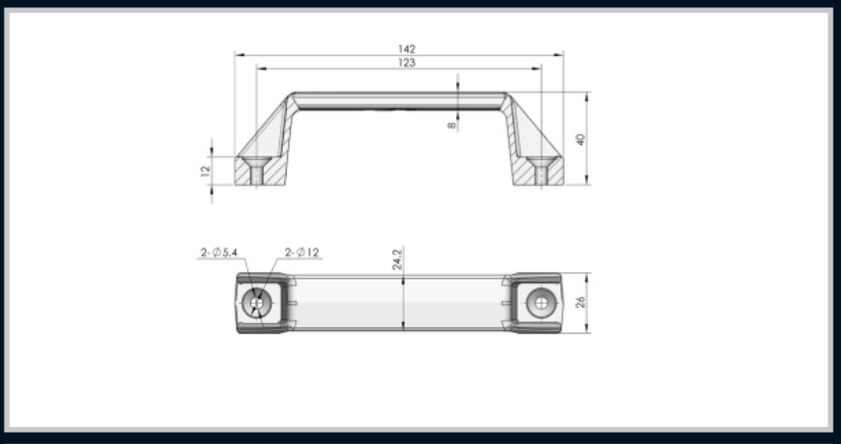

Part Number	Description
12.123.40.B	Small plastic grab handle

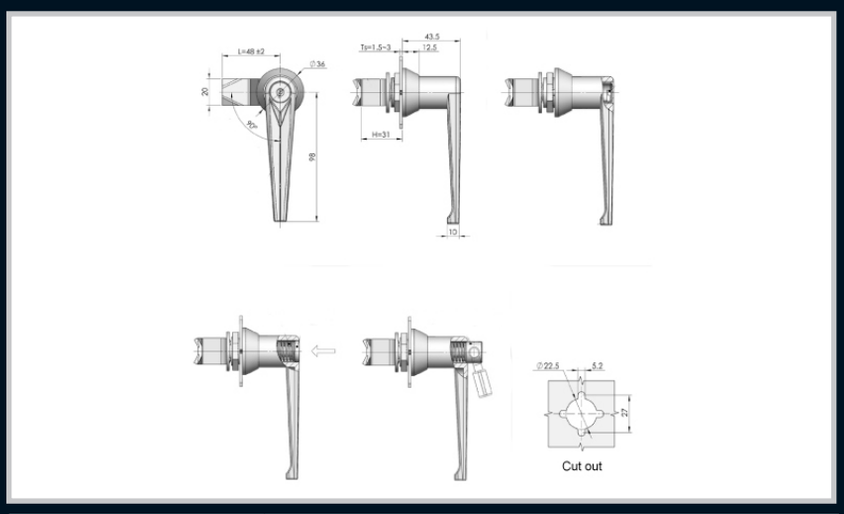

Part Number	Description
22.3.19.K/C	Key lockable L-handle Chrome

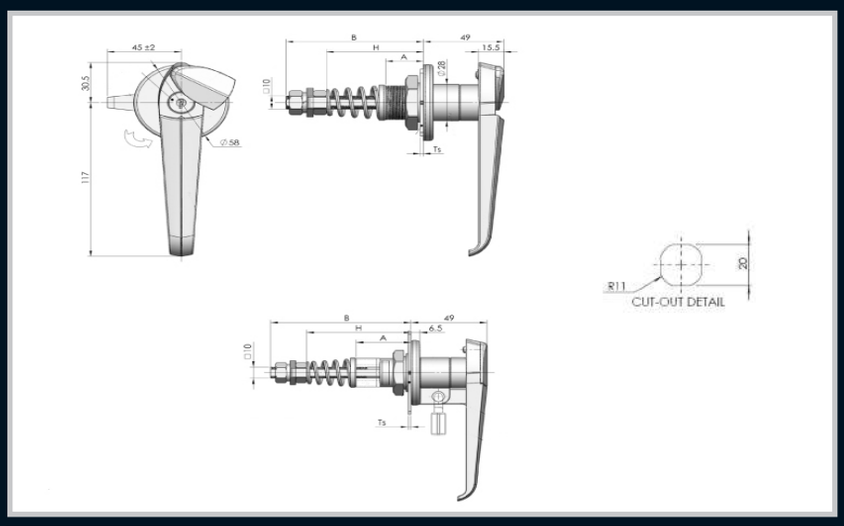

Part Number	Description
27.3.45.K/D/C.C	Key lockable compression L-handle with dust cap adjustable depth, Chrome
27.3.45.K/DK.C	Key and Padlockable compression L-handle with dust cap, adjustable depth
27.3.45.K/D/C	Key lockable L-handle with dust cap 117mm, Chrome

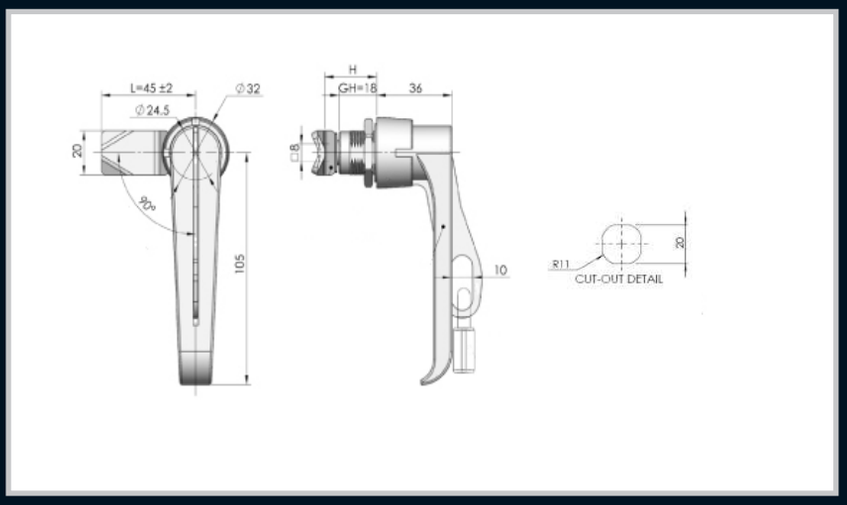

Part Number	Description
22.3.105.25.PP/K	Padlockable L-handle , Chrome

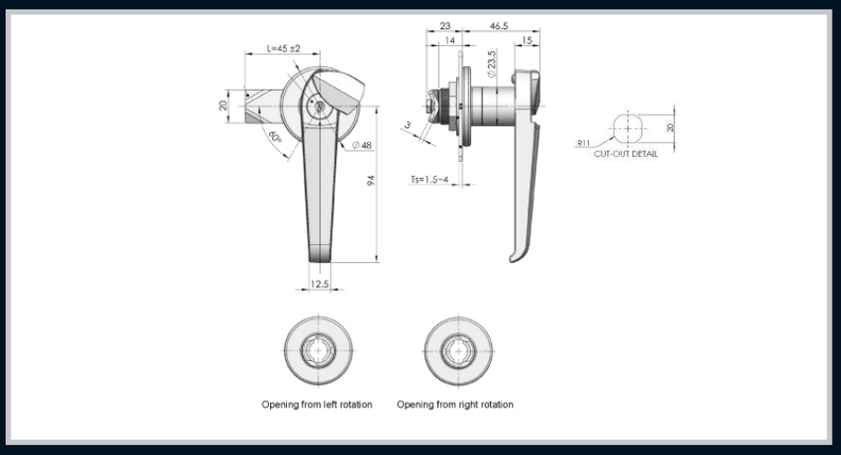

Part Number	Description
22.3.23.94.KDC	Key lockable L-handle with dust cap 94mm, Chrome

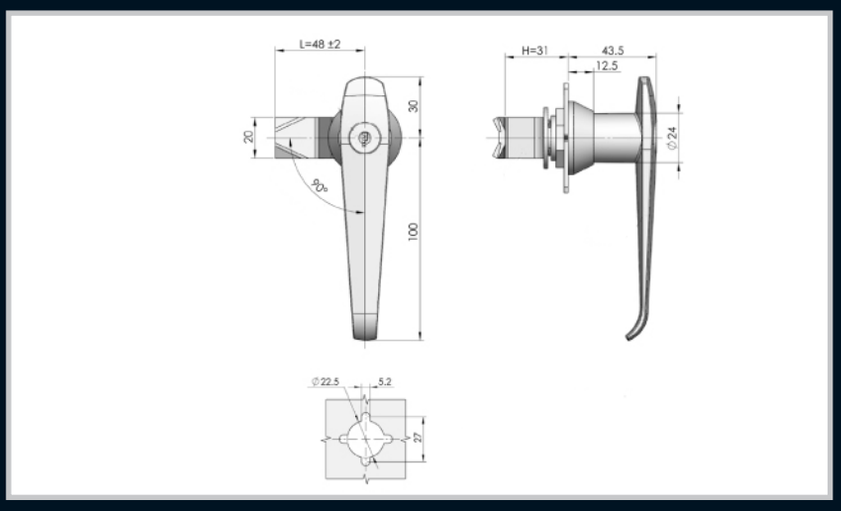

Part Number	Description
22.3.31.100.K/C	Key lockable L-handle 100mm, Chrome

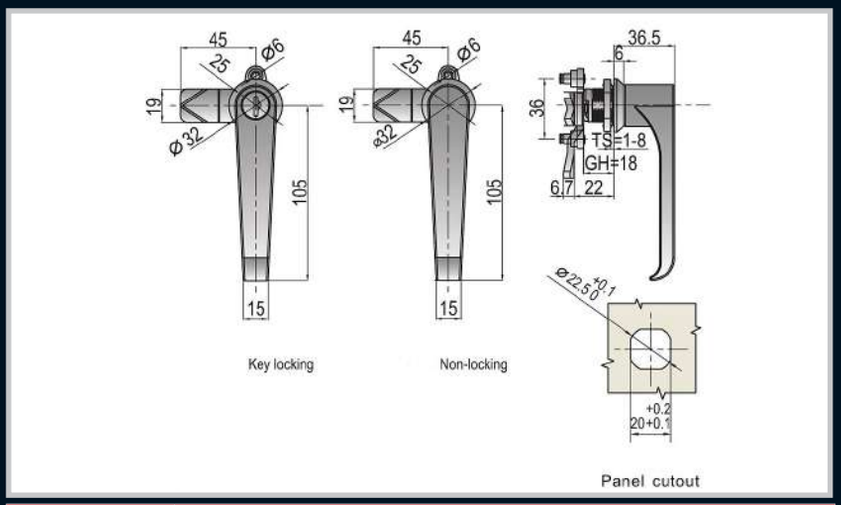

Part Number	Description
22.3.36.105K/B	Black powder coated ZDC housing and handle,MS cam, Key locking
22.3.36.105K/C	Chrome plated ZDC housing and handle, MS cam, Key locking
22.3.36.105B	Black powder coated ZDC housing and handle,MS cam,Non locking
22.3.36.105C	Chrome plated ZDC housing and handle, MS cam, Non locking
22.3.36.105SS	Stainless Steel housing and handle,Stainless steel cam,non locking

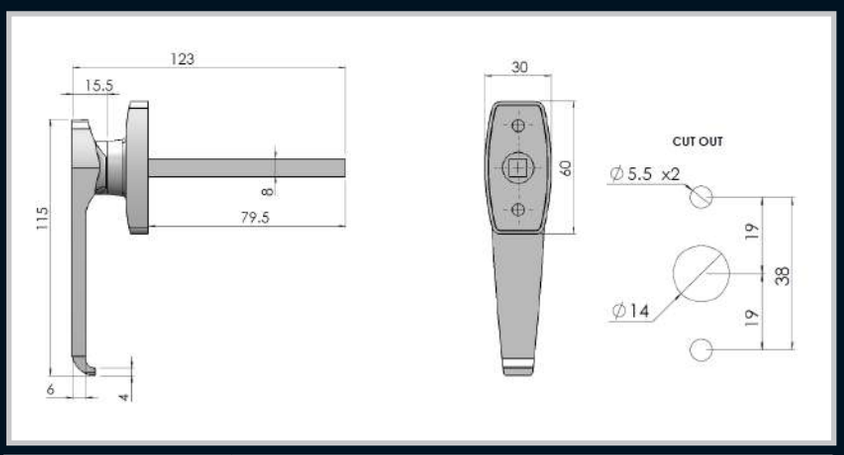

Remarks:
Key options:
Key 92268
Key CL001

Part Number	Description
12.L115S/92268	L handle Chrome Locking Concealed Fix With Spindle
12.L115S/CL001	L Handle Chrome Locking Concealed Fix With Spindle

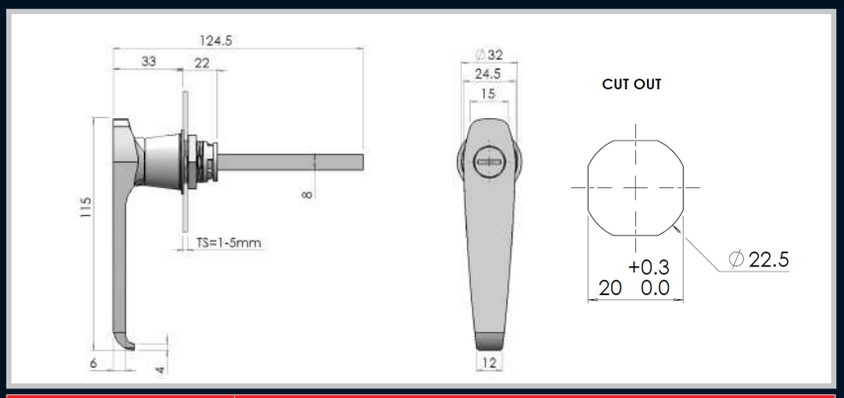

Remarks:
Key options:
Key 92268
Key CL001

Part Number	Description
22.L115S/92268	L handle Chrome Locking 1/4 Turn Fix With Spindle
22.L115S/CL001	L Handle Chrome Locking 1/4 Turn Fix With Spindle

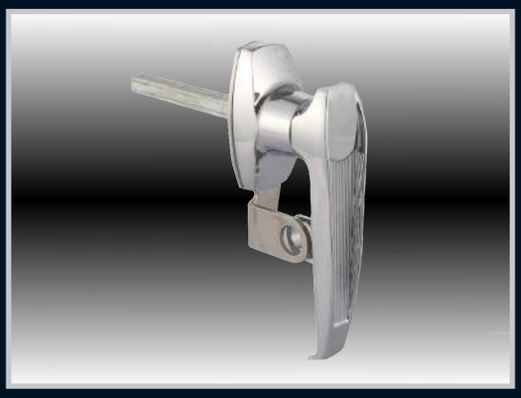

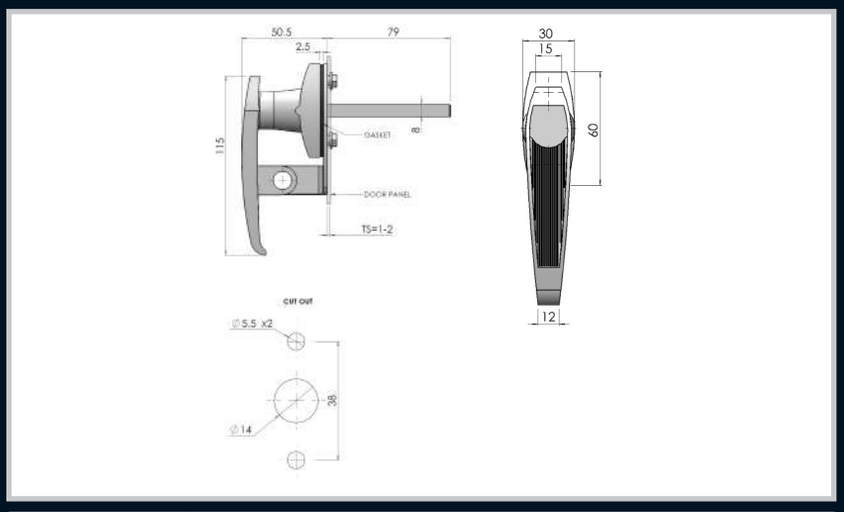

Remarks:
Movement options:
A/C - Anti-clockwise to unlock
C/W - Clockwise to unlock

Part Number	Description
12.L115SP/AC	L Handle Padlockable Concealed Fix With Spindle A/C To Unlock
12.L115SP/CW	L Handle Padlockable Concealed Fix With Spindle C/W To Unlock

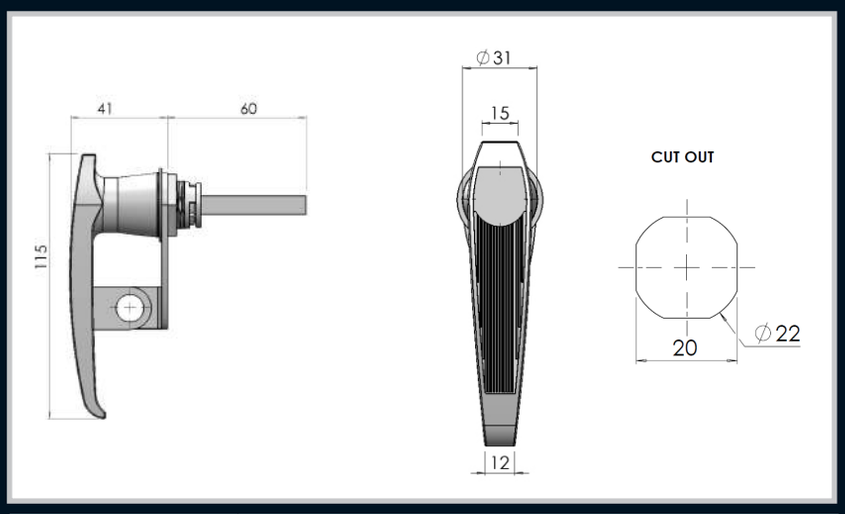

Remarks:
Movement options:
A/C - Anti-clockwise to unlock
C/W - Clockwise to unlock

Part Number	Description
22.L115SP/AC	L-handle padlock 1/4 turn fix with spindle A/C to Unlock
22.L115SP/CW	L-handle padlock 1/4 turn fix with spindle C/W to Unlock

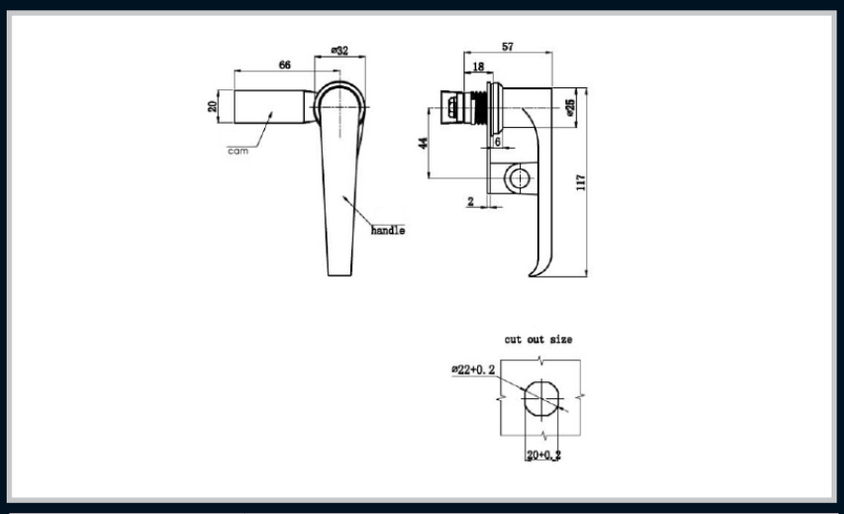

Remarks:
Movement options:
A/C - Anti-clockwise to unlock
C/W - Clockwise to unlock

Part Number	Description
22.L115/92268/CAM	L Handle Chrome Locking 1/4 Turn Fix No Spindle With Cam
22.L115P/CW/CAM	L Handle Padlockable 1/4 Turn Fix No Spindle C/W To Unlock With Cam
22.L115P/AC/CAM	L Handle Padlockabke 1/4 Turn Fix No Spindle A/C To Unlock With Cam

T - Handle

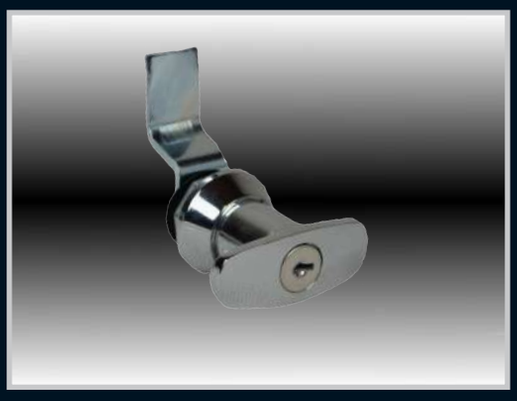

Remarks:
For cam options refer to pages 135,136,137

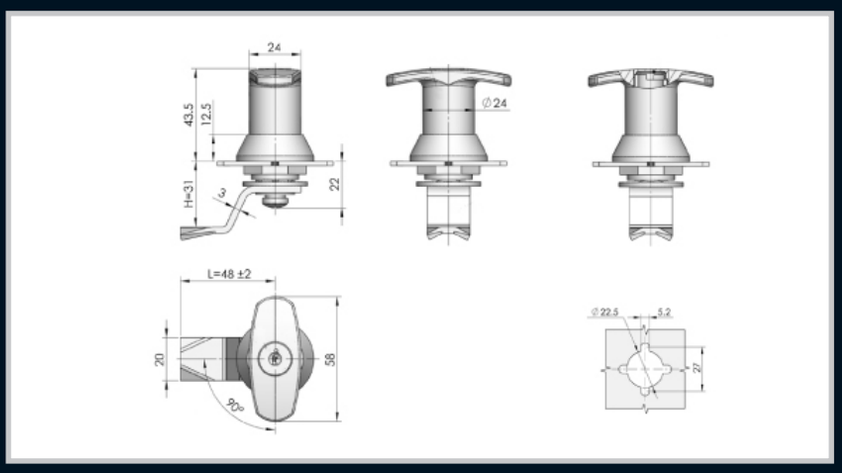

Part Number	Description
22.3.31.58.K/C	Key lockable T-handle, Chrome

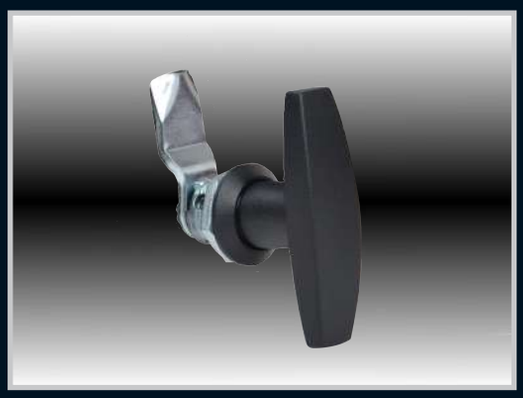

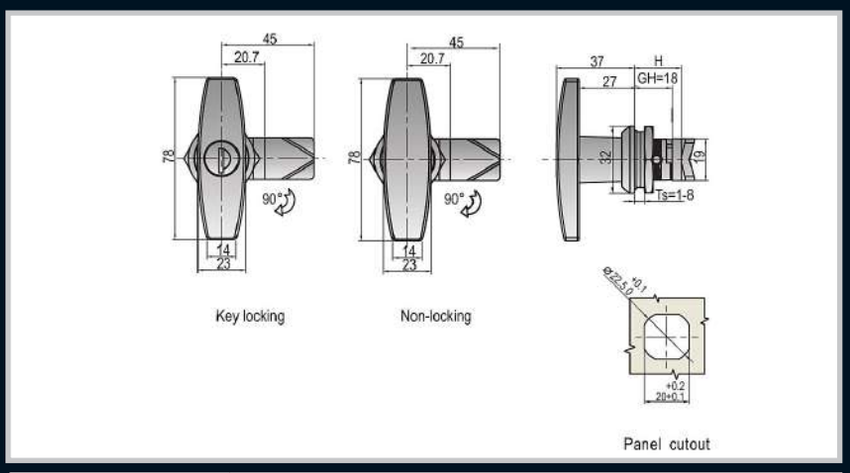

Part Number	Description
22.3.18.BK.78	Black powder coated ZDC housing and handle, MS cam, Key locking
22.3.30.60B	Black powder coated ZDC housing and handle, MS cam,Non locking

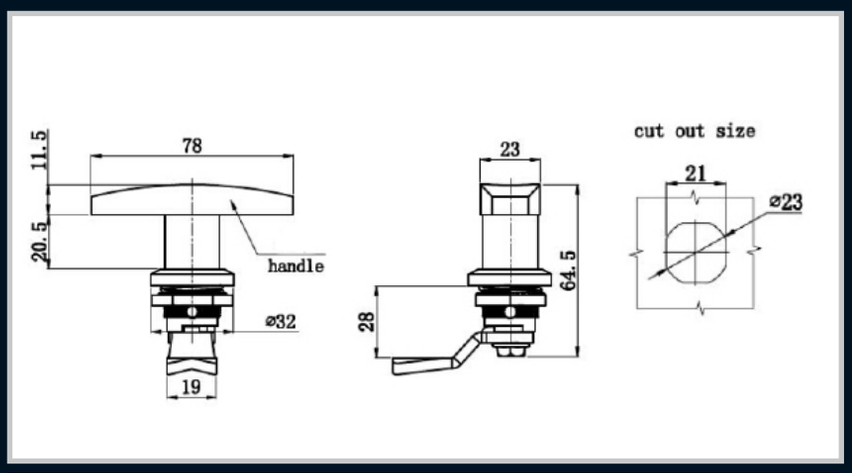

Part Number	Description
22.T60/92268/CAM	T-Handle chrome locking 1/4 turn fix no spindle with cam

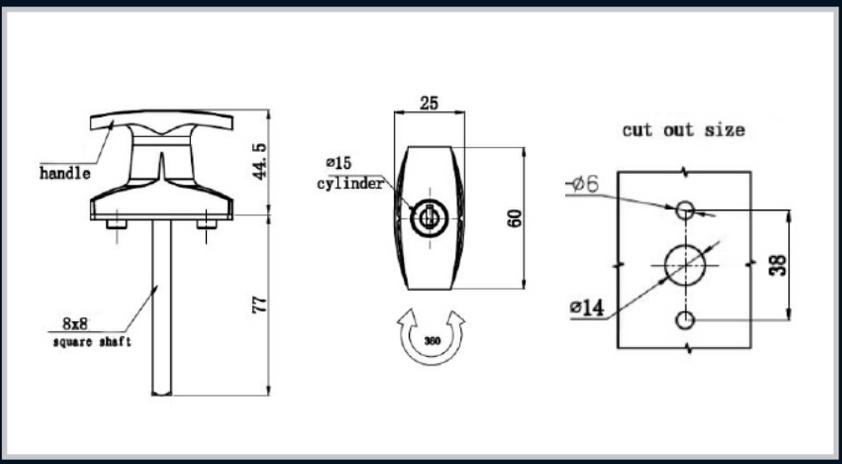

Part Number	Description
12.T.60S/92268	T-handle chrome locking concealed fix with spindle key 92268
12.T.60S/CL001	T-handle chrome locking concealed fix with spindle key CL001

Mini T - Handle

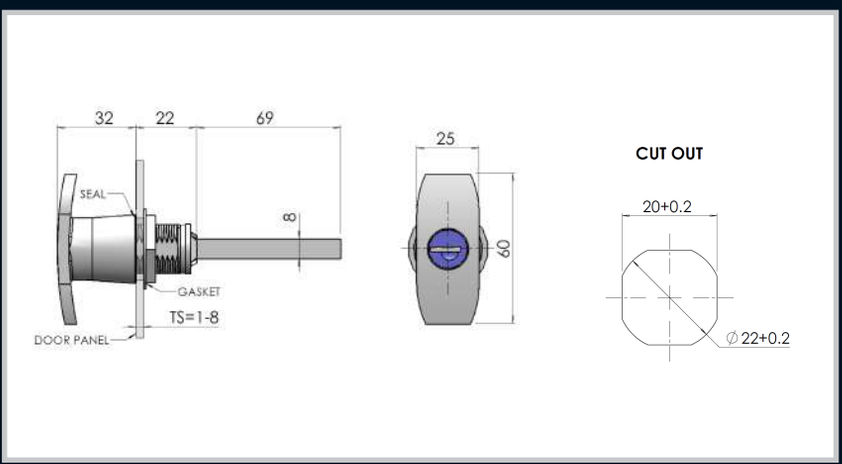

Part Number	Description
22.T.60S/92268	T-handle chrome locking 1/4 turn fix with spindle key 92268
22.T.60S/CL001	T-handle chrome locking 1/4 turn fix with spindle key CL001

Large T - Handle

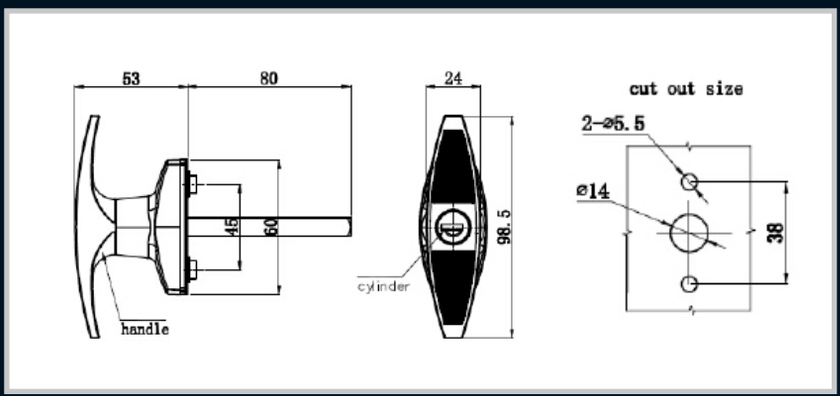

Remarks:
Concealed Fix , Movement 180 Degrees
Key options:
Key 92268
Key CL001

Part Number	Description
12.T.100S/CL001	Large T-handle chrome locking concealed fix with spindle key CL001
12.T.100S/92268	Large T-handle chrome locking concealed fix with spindle key 92268

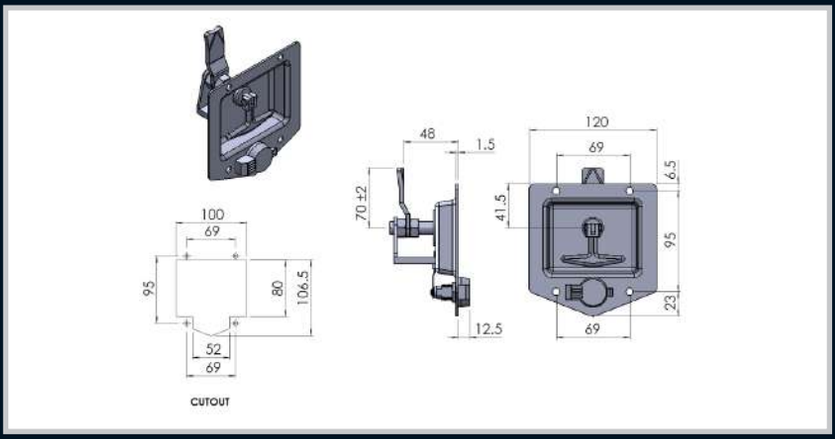

Part Number	Description
100.1.58.C/K	Key lockable flush adjustable paddle latch with T- handle , Chrome

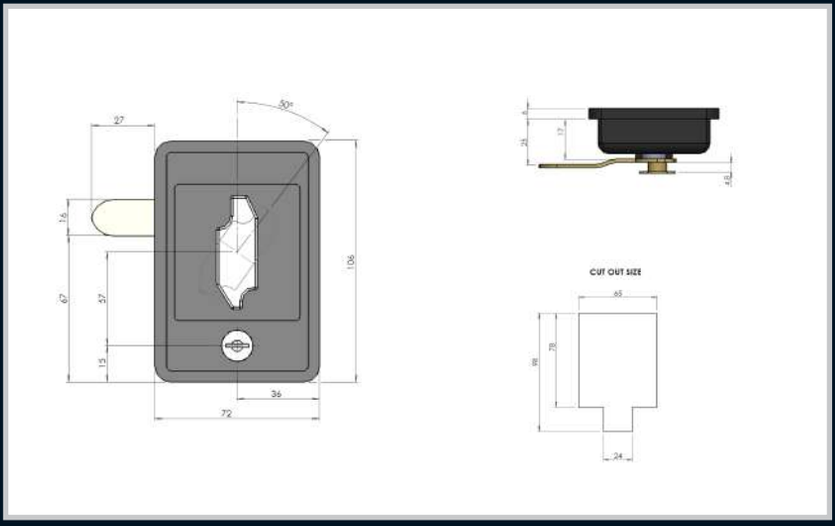

Part Number	Description
96.1.15/92268	Black zinc flush handle keyed 92268
96.1.15/CL001	Black zinc flush handle keyed CL001

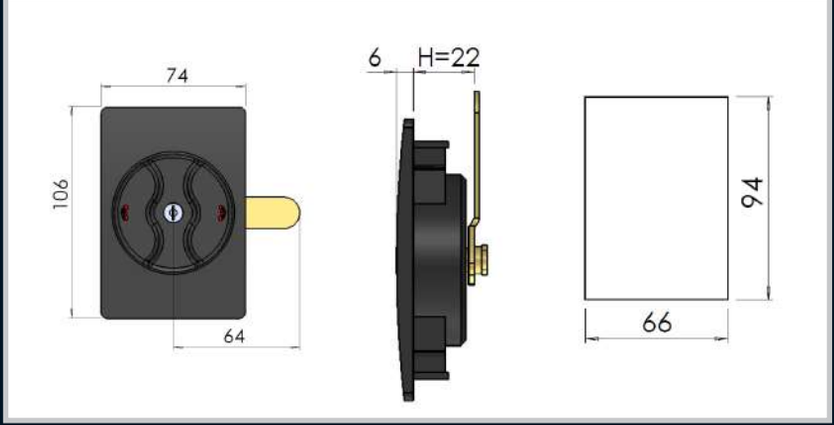

Part Number	Description
115.1.105/92268	Black plastic flush handle keyed 92268
115.1.105/CL001	Black plastic flush handle keyed CL001